ZD中大电机：15257416648

调速电动机
SPEED ADJUSTABLE MOTOR

■6W □60mm

■规格 Specs 连续额定 Cont. Rated

型号Model・类型 Type 导线型 Lead Wire Type		最大输出功率 Output power W	电压 Voltage V	频率 Frequency Hz	调速范围 Speed Control Range r/min	容许转矩 Allowance Torque		启动转矩 Starting Torque mN.m	电流 Current A	电容器容量 Capacitor μF
齿轮轴型 Pinion Shaft	圆轴型 Round Shaft					1200r/min mN.m	90r/min mN.m			
2IK6RGN-A	2IK6RA-A	6	1ph 100	50	90～1350	50	30	35	0.240	3.5
				60	90～1650	50	29	35	0.250	
2IK6RGN-E	2IK6RA-E	6	1ph 110	60	90～1650	50	29	30	0.160	2.0
			1ph 120						0.180	
2IK6RGN-C	2IK6RA-C	6	1ph 220	50	90～1350	55	29	35	0.130	0.8
			1ph 230						0.110	
2IK6RGN-H	2IK6RA-H	6	1ph 220	60	90～1650	55	29	35	0.140	0.8
			1ph 230						0.120	

●各种安全规格以电动机铭牌上的型号取得认证。
When the motor is approved under various safety standards, the model name on the nameplate is the approved model name.
●注："-A" 型号中电压为110V时，配置电容器容量以实际铭牌为准。
Note:"-A" it means the voltage 110v,the assembly capacitor vaule it is according the labe.

■种类 Type

● **电动机** Motor

机型 Type	型号Model	
	齿轮轴型 Pinion Shaft	圆轴型 Round Shaft
导线型 Lead Wire Type	2IK6RGN-A	2IK6RA-A
	2IK6RGN-E	2IK6RA-E
	2IK6RGN-C	2IK6RA-C
	2IK6RGN-H	2IK6RA-H

● **平行轴减速器（另售）** Parallel Shaft Gearhead (Sold Separately)

减速器种类 Gearhead Type	减速器型号 Gearhead Model	减速比 Gear Ratio
长寿命●低噪音 Long Life ● Low Noise	2GN□K	3、3.6、5、6、7.5、9、12.5、15、18、25、30、36、50、60、75、90、100、120、150、180、200
	2GN10XK（中间减速器 Decimal Gearhead）	

●减速器型号的□中为减速比的数值
Enter the gear ratio in the box（□）within the model name

ZD中大电机：15257416648

装有减速器时的容许转矩 Gear Motor-Torque Table

- 减速器另售·中间减速器另售。
  Gearhead and mid-gearbox can be sold separately.
- 减速品型号的□中为减速比的数值。
  Enter the gear ratio in the box(□) within the model name.
- ▭色表示与电动机同一方向运转，其他则为相反方向。
  The colored background ▭ indicates the same rotating direction of the motor while the rotating direction of others are opposite.
- 转速是以电动机的同步转速（50Hz：1500r/min、60Hz：1800r/min）为基准除以减速比而算出来的数值。实际转速将随负载大小变化所示数值减少2%～20%左右。
  The speed is calculated by dividing the motor's synchronous speed (50Hz：1500r/min、60Hz：1800r/min) by the gear ratio. The actual speed is 2%～20% less than the displayed value, depending on the size of the load.
- 希望以大于下表的减速比进行进一步减速时，可在电动机与减速机之间安装减速比为10的中间减速机。这时的容许转矩为3N·m。
  To reduce the speed beyond the gear ratio in the table, attach a decimal gearhead(gear ratio:10)between the gearhead and motor. In that case, the permissible torque is 3N·m.

容许力矩单位 Allowance Torque Unit：上段 Upside（N.m）/下段 Belowside（kgf.cm）

类型 Type 电动机/减速机 Motor/Gearhead	减速比 Gear Ratio		3	3.6	5	6	7.5	9	12.5	15	18	25	30	36	50	60	75	90	100	120	150	180	200
	转速 Speed r/min	50Hz	500	417	300	250	200	166	120	100	83	60	50	41	30	25	20	16	15	12.5	10	8.3	7.5
		60Hz	600	500	360	300	240	200	144	120	100	72	60	50	36	30	24	20	18	15	12	10	9
2IK6RGN-A 2IK6RGN-E 2IK6RGN-C 2IK6RGN-H	2GN□K	50Hz	0.12	0.14	0.19	0.23	0.29	0.35	0.49	0.58	0.70	0.88	1.1	1.3	1.6	1.9	2.4	2.9	3	3	3	3	3
			1.22	1.43	1.94	2.35	2.96	3.57	5.0	5.92	7.14	8.98	11.2	13.3	16.3	19.4	24.5	29.6	30	30	30	30	30
		60Hz	0.10	0.12	0.16	0.19	0.24	0.29	0.41	0.49	0.58	0.73	0.88	1.1	1.3	1.6	2.0	2.4	2.6	3	3	3	3
			1.02	1.22	1.63	1.94	2.45	2.96	4.18	5.0	5.92	7.45	8.98	11.2	13.3	16.3	20.4	24.5	2.65	30	30	30	30

容许悬挂负载·容许轴向负载 To Allow The Hoisting Of The Load Allow Axial Load

电动机（圆轴型）→272页　　Motor(Round Shaft) →P272
减速机→272页　　Gearhead→P272

减速机的容许负载惯性惯量 J Permissible Load Inertia J For Gearhead

→272页→P272

外形图（单位 mm）Dimensions(Unit mm)

减速器附有安装用螺丝Mounting screws are included with gearhead.

● **导线型** Lead Wiring Type

重量 Weight：电动机 Motor： 1.1kg　　减速器 Gearhead： 0.5kg

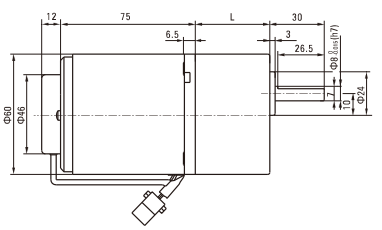

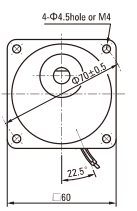

电动机型号 Motor Model	减速器型号 Gearhead Model	减速比 Gear Ratio	L1
2IK6RGN-A 2IK6RGN-E 2IK6RGN-C 2IK6RGN-H	2GN□K	3～18	32
		25～200	41.5

●减速器型号的□中为减速比的数值
Enter the gear ratio in the box（□）within the model name

ZD中大电机：15257416648

● **圆轴型的转轴部分** Shaft Section Of Round Shaft Type
除重量及轴部外电动机外形与齿轮轴型相同。
Excluding weight and the shaft section motor shape are the same as those of the pinion shaft type.

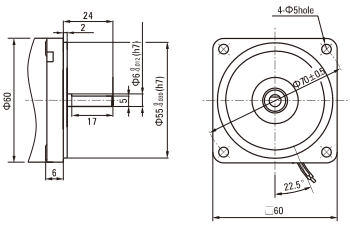

● **中间减速器** Decimal Gearhead
可安装在GN齿轮轴型上 Can be connected to GN pinion shaft type
电动机外形与齿轮轴型相同
2GN10XK
重量 Weight：0.24kg

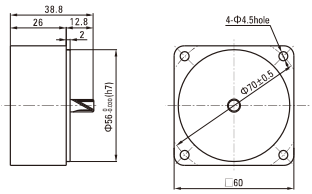

连接图 Wiring Diagram

US型/US Type	SS型/SS Type
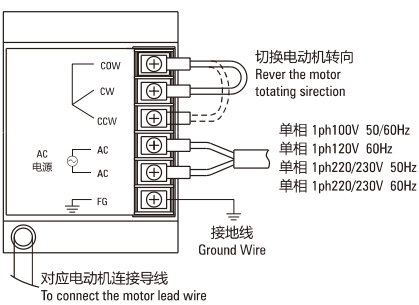	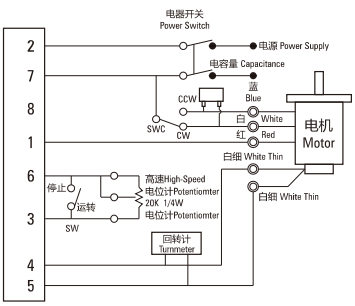

ZD中大电机：15257416648

调速电动机
SPEED ADJUSTABLE MOTOR

15W □70mm

规格 Specs 连续额定 Cont. Rated

型号Model・类型 Type 导线型 Lead Wire Type		最大输出功率 Output power W	电压 Voltage V	频率 Frequency Hz	调速范围 Speed Control Range r/min	容许转矩 Allowance Torque		启动转矩 Starting Torque mN.m	电流 Current A	电容器容量 Capacitor μF
齿轮轴型 Pinion Shaft	圆轴型 Round Shaft					1200r/min mN.m	90r/min mN.m			
3IK15RGN-A	3IK15RA-A	15	1ph 100	50	90～1350	120	35	55	0.35	6.0
				60	90～1650				0.33	
3IK15RGN-E	3IK15RA-E	15	1ph 110	60	90～1650	125	35	55	0.30	5.0
			1ph 120						0.32	
3IK15RGN-C	3IK15RA-C	15	1ph 220	50	90～1350	120	35	54	0.18	1.2
			1ph 230						0.20	
3IK15RGN-H	3IK15RA-H	15	1ph 220	60	90～1650	85	35	52	0.16	1.2
			1ph 230			105		55	0.15	

●各种安全规格以电动机铭牌上的型号取得认证。
When the motor is approved under various safety standards, the model name on the nameplate is the approved model name.
●注："-A" 型号中电压为110V时，配置电容器容量以实际铭牌为准。
Note:"-A" it means the voltage 110v,the assembly capacitor vaule it is according the labe.

种类 Type

● **电动机** Motor

机型 Type	型号Model	
	齿轮轴型 Pinion Shaft	圆轴型 Round Shaft
导线型 Lead Wire Type	3IK15RGN-A	3IK15RA-A
	3IK15RGN-E	3IK15RA-E
	3IK15RGN-C	3IK15RA-C
	3IK15RGN-H	3IK15RA-H

● **平行轴减速器（另售）** Parallel Shaft Gearhead (Sold Separately)

减速器种类 Gearhead Type	减速器型号 Gearhead Model	减速比 Gear Ratio
长寿命●低噪音 Long Life ● Low Noise	3GN□K	3、3.6、5、6、7.5、9、12.5、15、18、25、30、36、50、60、75、90、100、120、150、180、200
	3GN10XK（中间减速器 Decimal Gearhead）	

●减速器型号的□中为减速比的数值
Enter the gear ratio in the box（□）within the model name

ZD中大电机：15257416648

装有减速器时的容许转矩 Gear Motor-Torque Table

- 减速器另售·中间减速器另售。
  Gearhead and mid-gearbox can be sold separately.
- 减速品型号的□中为减速比的数值。
  Enter the gear ratio in the box(□) within the model name.
- ▭色表示与电动机同一方向运转，其他则为相反方向。
  The colored background ▭ indicates the same rotating direction of the motor while the rotating direction of others are opposite.
- 转速是以电动机的同步转速（50Hz：1500r/min、60Hz：1800r/min）为基准除以减速比而算出来的数值。实际转速将随负载大小变化所示数值减少2%～20%左右。
  The speed is calculated by dividing the motor's synchronous speed (50Hz：1500r/min、60Hz：1800r/min) by the gear ratio. The actual speed is 2%～20% less than the displayed value, depending on the size of the load.
- 希望以大于下表的减速比进行进一步减速时，可在电动机与减速机之间安装减速比为10的中间减速机。这时的容许转矩为5N·m。
  To reduce the speed beyond the gear ratio in the table, attach a decimal gearhead(gear ratio:10)between the gearhead and motor. In that case, the permissible torque is 5N·m.

容许力矩单位 Allowance Torque Unit：上段 Upside（N.m）/下段 Belowside（kgf.cm）

类型 Type 电动机/减速机 Motor/Gearhead	减速比 Gear Ratio		3	3.6	5	6	7.5	9	12.5	15	18	25	30	36	50	60	75	90	100	120	150	180	200
	转速 Speed r/min	50Hz	500	417	300	250	200	166	120	100	83	60	50	41	30	25	20	16	15	12.5	10	8.3	7.5
		60Hz	600	500	360	300	240	200	144	120	100	72	60	50	36	30	24	20	18	15	12	10	9
3IK15RGN-A 3IK15RGN-E 3IK15RGN-C 3IK15RGN-H	3GN□K	50Hz	0.30	0.36	0.51	0.61	0.76	0.91	13	15	18	2.3	2.7	3.3	4.1	5	5	5	5	5	5	5	5
			3.06	3.67	5.20	6.22	7.75	9.28	13.2	15.3	18.3	23.4	27.5	33.7	41.8	50	50	50	50	50	50	50	50
		60Hz	0.26	0.31	0.43	0.51	0.64	0.77	1.1	1.3	1.5	1.9	2.3	2.8	3.5	4.2	5	5	5	5	5	5	5
			2.65	3.16	4.38	5.20	6.53	7.85	11.2	13.2	15.3	19.3	23.4	28.5	35.7	42.8	50	50	50	50	50	50	50

容许悬挂负载·容许轴向负载 To Allow The Hoisting Of The Load Allow Axial Load

电动机（圆轴型）→272页　　Motor(Round Shaft) →P272
减速机→272页　　Gearhead→P272

减速机的容许负载惯性惯量 J Permissible Load Inertia J For Gearhead

→272页→P272

外形图（单位 mm）Dimensions(Unit mm)

减速器附有安装用螺丝Mounting screws are included with gearhead.

● **导线型** Lead Wiring Type

重量 Weight：电动机 Motor：1.2kg　　减速器 Gearhead：0.5kg

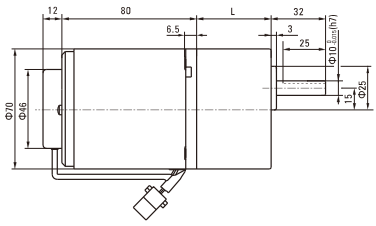

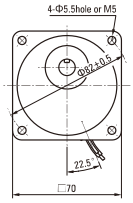

电动机型号 Motor Model	减速器型号 Gearhead Model	减速比 Gear Ratio	L1
3IK15RGN-A 3IK15RGN-E 3IK15RGN-C 3IK15RGN-H	3GN□K	3～18	32
		25～200	42

●减速器型号的□中为减速比的数值
Enter the gear ratio in the box（□）within the model name

ZD中大电机：15257416648

● **键・键槽（减速器附件）** Key・Keyway(Accessory Of Gearhead)

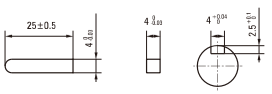

● **圆轴型的转轴部分** Shaft Section Of Round Shaft Type

除重量及轴部外电动机外形与齿轮轴型相同。

Excluding weight and the shaft section motor shape are the same as those of the pinion shaft type.

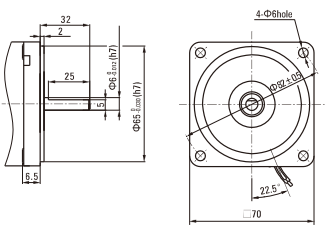

● **中间减速器** Decimal Gearhead

可安装在GN齿轮轴型上 Can be connected to GN pinion shaft type

电动机外形与齿轮轴型相同

3GN10XK

重量 Weight：0.31kg

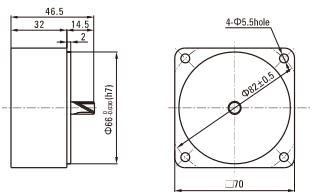

连接图 Wiring Diagram

US型/US Type	SS型/SS Type
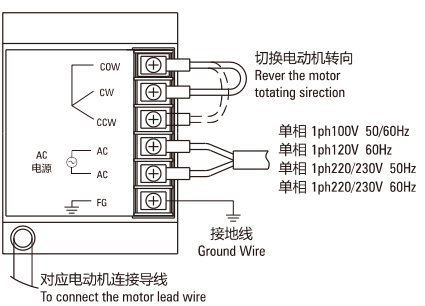	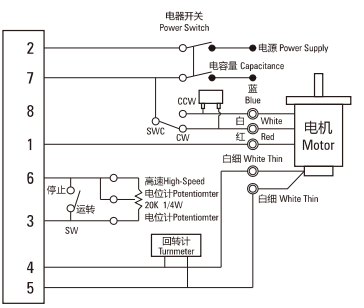

ZD中大电机：15257416648

调速电动机
SPEED ADJUSTABLE MOTOR

■25W □80mm

■规格 Specs 连续额定 Cont. Rated

型号Model・类型 Type 导线型 Lead Wire Type		最大输出功率 Output power W	电压 Voltage V	频率 Frequency Hz	调速范围 Speed Control Range r/min	容许转矩 Allowance Torque		启动转矩 Starting Torque mN.m	电流 Current A	电容器容量 Capacitor μF
齿轮轴型 Pinion Shaft	圆轴型 Round Shaft					1200r/min mN.m	90r/min mN.m			
4IK25RGN-A	4IK25RA-A	25	1ph 100	50	90～1350	190	47	88	0.50	8.0
				60	90～1650				0.55	
4IK25RGN-E	4IK25RA-E	25	1ph 110	60	90～1650	190	50	105	0.45	7.0
			1ph 120						0.50	
4IK25RGN-C	4IK25RA-C	25	1ph 220	50	90～1350	190	47	88	0.25	1.8
			1ph 230						0.23	
4IK25RGN-H	4IK25RA-H	25	1ph 220	60	90～1650	190	45	88	0.23	1.8
			1ph 230							

●各种安全规格以电动机铭牌上的型号取得认证。
When the motor is approved under various safety standards, the model name on the nameplate is the approved model name.
●注："-A" 型号中电压为110V时，配置电容器容量以实际铭牌为准。
Note:"-A" it means the voltage 110v,the assembly capacitor vaule it is according the labe.

■种类 Type

● **电动机** Motor

机型 Type	型号Model	
	齿轮轴型 Pinion Shaft	圆轴型 Round Shaft
导线型 Lead Wire Type	4IK25RGN-A	4IK25RA-A
	4IK25RGN-E	4IK25RA-E
	4IK25RGN-C	4IK25RA-C
	4IK25RGN-H	4IK25RA-H

● **平行轴减速器（另售）** Parallel Shaft Gearhead (Sold Separately)

减速器种类 Gearhead Type	减速器型号 Gearhead Model	减速比 Gear Ratio
长寿命●低噪音 Long Life ● Low Noise	4GN□K	3、3.6、5、6、7.5、9、12.5、15、18、25、30、36、50、60、75、90、100、120、150、180、200
	4GN10XK（中间减速器 Decimal Gearhead）	

●减速器型号的□中为减速比的数值
Enter the gear ratio in the box（□）within the model name

ZD中大电机：15257416648

装有减速器时的容许转矩 Gear Motor-Torque Table

- 减速器另售·中间减速器另售。电动机型号的□中为表示带端子箱型的记号(T)。
  Gearhead and mid-gearbox can be sold separately. Enter the code that represents the terminal box type (T) in the box (□) within the model name.
- 减速品型号的□中为减速比的数值。
  Enter the gear ratio in the box(□) within the model name.
- ▭色表示与电动机同一方向运转，其他则为相反方向。
  The colored background ▭ indicates the same rotating direction of the motor while the rotating direction of others are opposite.
- 转速是以电动机的同步转速（50Hz：1500r/min、60Hz：1800r/min）为基准除以减速比而算出来的数值。实际转速将随负载大小变化所示数值减少2%～20%左右。
  The speed is calculated by dividing the motor's synchronous speed (50Hz：1500r/min、60Hz：1800r/min) by the gear ratio. The actual speed is 2%～20% less than the displayed value, depending on the size of the load.
- 希望以大于下表的减速比进行进一步减速时，可在电动机与减速机之间安装减速比为10的中间减速机。这时的容许转矩为6N·m。
  To reduce the speed beyond the gear ratio in the table, attach a decimal gearhead(gear ratio:10)between the gearhead and motor. In that case, the permissible torque is 6N·m.

容许力矩单位 Allowance Torque Unit：上段 Upside（N.m）/下段 Belowside（kgf.cm）

类型 Type 电动机/减速机 Motor/Gearhead	减速比 Gear Ratio		3	3.6	5	6	7.5	9	12.5	15	18	25	30	36	50	60	75	90	100	120	150	180	200
	转速 Speed r/min	50Hz	500	417	300	250	200	166	120	100	83	60	50	41	30	25	20	16	15	12.5	10	8.3	7.5
		60Hz	600	500	360	300	240	200	144	120	100	72	60	50	36	30	24	20	18	15	12	10	9
4IK25RGN-A 4IK25RGN-E 4IK25RGN-C 4IK25RGN-H	4GN□K	50Hz	0.49	0.58	0.81	0.97	1.2	1.5	2.0	2.4	2.9	3.7	4.4	5.3	6.6	7.9	8	8	8	8	8	8	8
			5.00	5.91	8.26	9.89	12.2	15.3	20.4	24.4	29.6	37.7	44.9	54.1	67.3	80	80	80	80	80	80	80	80
		60Hz	0.40	0.48	0.67	0.80	1.0	1.2	1.7	2.0	2.4	3.0	3.6	4.3	5.4	6.5	8	8	8	8	8	8	8
			4.08	4.89	6.83	8.16	10.2	12.2	17.3	20.4	24.4	30.6	36.7	43.8	55.1	66.3	80	80	80	80	80	80	80

容许悬挂负载·容许轴向负载 To Allow The Hoisting Of The Load Allow Axial Load

电动机（圆轴型）→272页　　Motor(Round Shaft) →P272
减速机→272页　　Gearhead→P272

减速机的容许负载惯性惯量 J Permissible Load Inertia J For Gearhead

→272页→P272

外形图（单位 mm）Dimensions(Unit mm)

减速器附有安装用螺丝Mounting screws are included with gearhead.

● **导线型** Lead Wiring Type

重量 Weight：电动机 Motor： 1.7kg　　减速器 Gearhead： 0.8kg

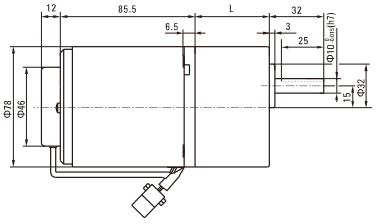

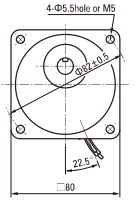

电动机型号 Motor Model	减速器型号 Gearhead Model	减速比 Gear Ratio	L1
4IK25RGN-A 4IK25RGN-E 4IK25RGN-C 4IK25RGN-H	4GN□K	3～18	32
		25～200	43.5

●减速器型号的□中为减速比的数值
Enter the gear ratio in the box（□）within the model name

ZD中大电机：15257416648

● **键・键槽（减速器附件）** Key・Keyway(Accessory Of Gearhead)

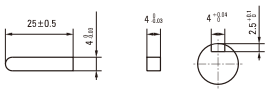

● **圆轴型的转轴部分** Shaft Section Of Round Shaft Type

除重量及轴部外电动机外形与齿轮轴型相同。

Excluding weight and the shaft section motor shape are the same as those of the pinion shaft type.

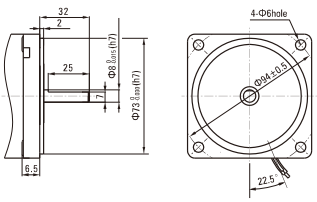

● **中间减速器** Decimal Gearhead

可安装在GN齿轮轴型上 Can be connected to GN pinion shaft type

电动机外形与齿轮轴型相同

4GN10XK

重量 Weight：0.41kg

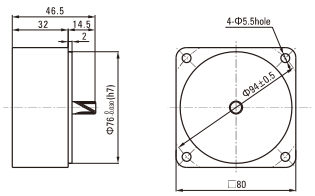

连接图 Wiring Diagram

US型/US Type	SS型/SS Type
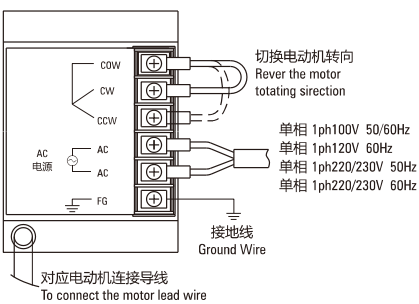	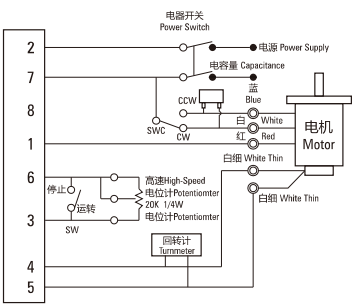

ZD中大电机：15257416648

弧锥直角
SPIRAL BEVEL RIGHT ANGLE

装有减速器时的容许转矩 Gear Motor-Torque Table

- 减速器·中间减速器另售。● 电动机型号的□中为表示带端子箱型的记号(T)。
  Gearhead and mid-gearbox can be sold separately. Enter the code that represents the terminal box type (T) in the box (□) within the model name.
- 减速器型号的□中为减速比的数值。 色表示与电动机同一方向运转，其他则为相反方向。
  Enter the gear ratio in the box (□) within the model name.
  The colored background indicates the same rotating direction of the motor while the rotating direction of others are opposite.
- 转速是以电动机的同步转速 (50Hz:1500r/min、60Hz:1800r/min) 为基准除以减速比而算出来的数值。实际转速将随负载大小变化而比所示数值减少2%~20%左右。
  The speed is calculated by diving the motor's synchronous speed (50Hz:1500r/min、60Hz:1800r/min) by the gear ratio. The actual speed is 2%~20% less than the displayed value, depending on the size of the load.
- 希望以大于下表的减速比进行进一步减速时，可在电动机与减速器之间安装减速比为10的中间减速器。这时的容许转矩为8N·m。
  To reduce the speed beyond the gear ratio in the table, attach a mid-gearbox (gear ratio:10) between the gearhead and motor. In that case, the permissible torque is 8N·m.

容许力矩单位 Allowance Torque Unit: 上段 Upside (N.m) / 下段 Belowside (kgf.cm)

机型Type 电动机/减速器 Motor/Gearhead		减速比Gear Ratio		3	3.6	5	6	7.5	9	12.5	15	18	25	30	3.6	50	60	75	90	100	120	150	180
		转速Speed r/min	50Hz	500	417	300	250	200	166	120	100	83	60	50	417	30	25	20	16	15	12	10	8
			60Hz	600	500	360	300	240	200	144	120	100	72	60	500	36	30	24	20	18	15	12	10
4IK25RGN-A□		容许力矩 Allowance Torque	50Hz	0.36	0.43	0.59	0.71	0.99	1.18	1.64	1.97	2.37	3.29	3.95	4.73	6.58	7.10	8.00	8.00	8.00	8.00	8.00	8.00
4IK25RGN-E□	4GN□RC			3.62	4.35	6.04	7.25	10.1	12.1	16.8	20.1	24.2	33.5	40.3	48.3	67.1	72.5	80.0	80.00	80.00	80.00	80.00	80.00
4IK25RGN-C□	4GN□RT		60Hz	0.29	0.34	0.48	0.57	0.80	0.95	1.33	1.59	1.91	2.65	3.18	3.82	5.30	5.73	7.16	8.00	8.00	8.00	8.00	8.00
4IK25RGN-H□				2.92	3.51	4.87	5.84	8.12	9.74	13.5	16.2	19.5	27.1	32.5	39.0	54.1	58.4	73.0	80.00	80.00	80.00	80.00	80.00

调速尺寸图 Speed Control Type Drawing

4IK25RGN-A□/4GN□RC　4IK25RGN-C□/4GN□RC 4IK25RGN-E□/4GN□RC　4IK25RGN-H□/4GN□RC	4IK25RGN-A□/4GN□RT　4IK25RGN-C□/4GN□RT 4IK25RGN-E□/4GN□RT　4IK25RGN-H□/4GN□RT

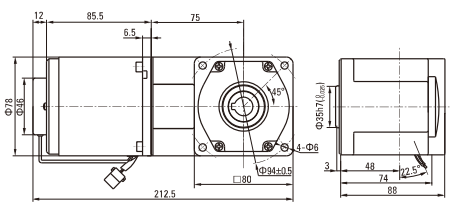

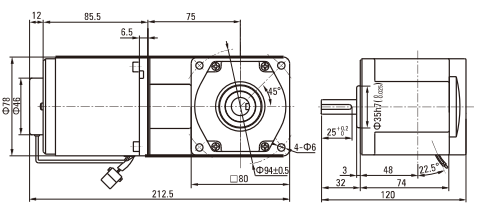

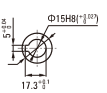

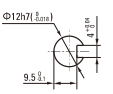

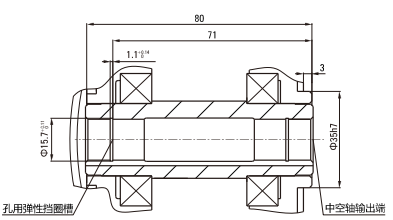

注：接插件配中大标准型调速器　Note:The connector is for zhongda standard speed controller

ZD中大电机：15257416648

蜗轮蜗杆直角
WORM GEAR RIGHT ANGLE

装有减速器时的容许转矩 Gear Motor-Torque Table

- 减速器·中间减速器另售。● 电动机型号的□中为表示带端子箱型的记号(T)。
  Gearhead and mid-gearbox can be sold separately. Enter the code that represents the terminal box type (T) in the box (□) within the model name.
- 减速器型号的□中为减速比的数值。 色表示与电动机同一方向运转，其他则为相反方向。
  Enter the gear ratio in the box (□) within the model name.
  The colored background indicates the same rotating direction of the motor while the rotating direction of others are opposite.
- 转速是以电动机的同步转速 (50Hz:1500r/min、60Hz:1800r/min) 为基准除以减速比而算出来的数值。实际转速将随负载大小变化而比所示数值减少2%~20%左右。
  The speed is calculated by diving the motor's synchronous speed (50Hz:1500r/min、60Hz:1800r/min) by the gear ratio. The actual speed is 2%~20% less than the displayed value, depending on the size of the load.
- 希望以大于下表的减速比进行进一步减速时，可在电动机与减速器之间安装减速比为10的中间减速器。这时的容许转矩为8N·m。
  To reduce the speed beyond the gear ratio in the table, attach a mid-gearbox (gear ratio:10) between the gearhead and motor. In that case, the permissible torque is 8N-m.

容许力矩单位 Allowance Torque Unit: 上段 Upside (N.m) / 下段 Belowside (kgf.cm)

机型Type 电动机/减速器 Motor/Gearhead		减速比Gear Ratio		3	3.6	5	6	7.5	9	12.5	15	18	25	30	3.6	50	60	75	90	100	120	150	180
		转速Speed r/min	50Hz	500	417	300	250	200	166	120	100	83	60	50	417	30	25	20	16	15	12	10	8
			60Hz	600	500	360	300	240	200	144	120	100	72	60	500	36	30	24	20	18	15	12	10
4IK25RGN-A□ 4IK25RGN-E□ 4IK25RGN-C□ 4IK25RGN-H□	4GN□RH 4GN□RA	容许力矩 Allowance Torque	50Hz	0.26	0.31	0.39	0.46	0.58	0.70	0.97	1.16	1.39	1.93	2.32	2.78	3.87	4.64	5.80	6.96	7.74	8.00	8.00	8.00
				2.63	3.16	3.95	4.74	5.92	7.10	9.87	11.8	14.2	19.7	23.7	28.4	39.5	47.4	59.2	71.0	78.9	80.0	80.0	80.0
			60Hz	0.21	0.31	0.39	0.46	0.58	0.70	0.97	1.16	1.39	1.93	2.32	2.78	3.87	4.64	5.82	6.96	7.74	8.00	8.00	8.00
				2.12	3.16	3.95	4.74	5.92	7.10	9.87	11.8	14.2	19.7	23.7	28.4	39.5	47.4	59.2	71.0	78.9	80.0	80.0	80.0

调速尺寸图 Speed Control Type Drawing

4IK25RGN-A□/4GN□RH 4IK25RGN-E□/4GN□RH	4IK25RGN-C□/4GN□RH 4IK25RGN-H□/4GN□RH
4IK25RGN-A□/4GN□RA 4IK25RGN-E□/4GN□RA	4IK25RGN-C□/4GN□RA 4IK25RGN-H□/4GN□RA

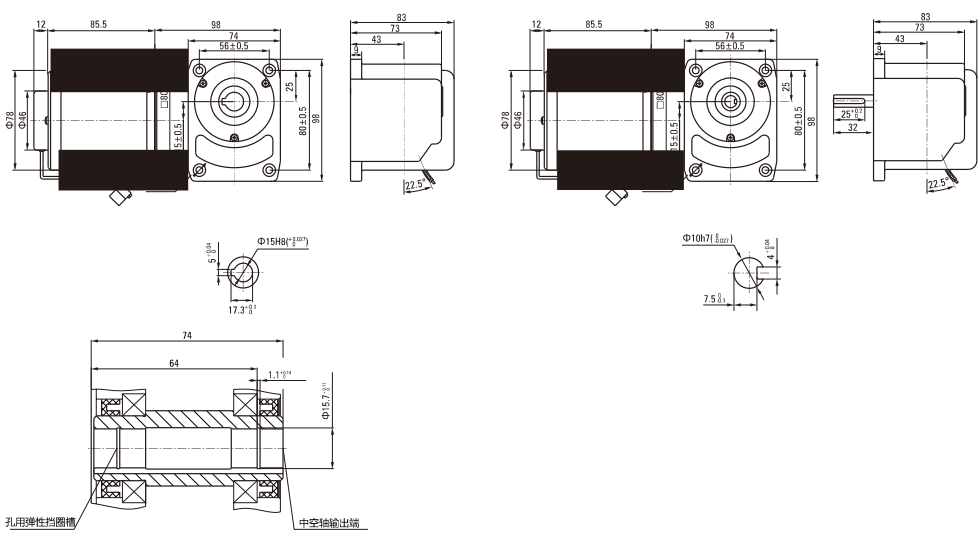

注：接插件配中大标准型调速器 Note:The connector is for zhongda standard speed controller

ZD中大电机：15257416648

调速电动机
SPEED ADJUSTABLE MOTOR

40W □90mm

规格 Specs 连续额定 Cont. Rated

型号Model・类型 Type 导线型 Lead Wire Type		最大输出功率 Output power W	电压 Voltage V	频率 Frequency Hz	调速范围 Speed Control Range r/min	容许转矩 Allowance Torque		启动转矩 Starting Torque mN.m	电流 Current A	电容器容量 Capacitor μF
齿轮轴型 Pinion Shaft	圆轴型 Round Shaft					1200r/min mN.m	90r/min mN.m			
5IK40RGN-A	5IK40RA-A	40	1ph 100	50	90～1350	260	70	180	0.65	12.0
				60	90～1650				0.70	
5IK40RGN-E	5IK40RA-E	40	1ph 110	60	90～1650	260	65	180	0.55	8.0
			1ph 120						0.60	
5IK40RGN-C	5IK40RA-C	40	1ph 220	50	90～1350	300	75	160	0.35	2.5
			1ph 230						0.40	
5IK40RGN-H	5IK40RA-H	40	1ph 220	60	90～1650	230	70	145	0.35	2.5
			1ph 230						0.40	

●各种安全规格以电动机铭牌上的型号取得认证。
When the motor is approved under various safety standards, the model name on the nameplate is the approved model name.
●注："-A" 型号中电压为110V时，配置电容器容量以实际铭牌为准。
Note:"-A" it means the voltage 110v,the assembly capacitor vaule it is according the labe.

种类 Type

● **电动机** Motor

机型 Type	型号Model	
	齿轮轴型 Pinion Shaft	圆轴型 Round Shaft
导线型 Lead Wire Type	5IK40RGN-A	5IK40RA-A
	5IK40RGN-E	5IK40RA-E
	5IK40RGN-C	5IK40RA-C
	5IK40RGN-H	5IK40RA-H

● **平行轴减速器（另售）** Parallel Shaft Gearhead (Sold Separately)

减速器种类 Gearhead Type	减速器型号 Gearhead Model	减速比 Gear Ratio
长寿命●低噪音 Long Life ● Low Noise	5GN□K	3、3.6、5、6、7.5、9、12.5、15、18、25、30、36、50、60、75、90、100、120、150、180、200
	5GN10XK（中间减速器 Decimal Gearhead）	

●减速器型号的□中为减速比的数值
Enter the gear ratio in the box（□）within the model name

ZD中大电机：15257416648

装有减速器时的容许转矩 Gear Motor-Torque Table

- 减速器另售·中间减速器另售。电动机型号的□中为表示带端子箱型的记号(T)。
  Gearhead and mid-gearbox can be sold separately. Enter the code that represents the terminal box type (T) in the box (□) within the model name.
- 减速品型号的□中为减速比的数值。
  Enter the gear ratio in the box(□) within the model name.
- ▭色表示与电动机同一方向运转，其他则为相反方向。
  The colored background ▭ indicates the same rotating direction of the motor while the rotating direction of others are opposite.
- 转速是以电动机的同步转速（50Hz：1500r/min、60Hz：1800r/min）为基准除以减速比而算出来的数值。实际转速将随负载大小变化所示数值减少2%～20%左右。
  The speed is calculated by dividing the motor's synchronous speed (50Hz：1500r/min、60Hz：1800r/min) by the gear ratio. The actual speed is 2%～20% less than the displayed value, depending on the size of the load.
- 希望以大于下表的减速比进行进一步减速时，可在电动机与减速机之间安装减速比为10的中间减速机。这时的容许转矩为10N·m。
  To reduce the speed beyond the gear ratio in the table, attach a decimal gearhead(gear ratio:10)between the gearhead and motor. In that case, the permissible torque is 10N·m.

容许力矩单位 Allowance Torque Unit：上段 Upside（N.m）/下段 Belowside（kgf.cm）

类型 Type 电动机/减速机 Motor/Gearhead	减速比 Gear Ratio		3	3.6	5	6	7.5	9	12.5	15	18	25	30	36	50	60	75	90	100	120	150	180	200
	转速 Speed r/min	50Hz	500	417	300	250	200	166	120	100	83	60	50	41	30	25	20	16	15	12.5	10	8.3	7.5
		60Hz	600	500	360	300	240	200	144	120	100	72	60	50	36	30	24	20	18	15	12	10	9
5IK40RGN-A 5IK40RGN-E 5IK40RGN-C 5IK40RGN-H	5GN□K	50Hz	0.77	0.92	1.3	1.5	1.9	2.3	3.2	3.8	4.6	5.7	6.9	8.3	10	10	10	10	10	10	10	10	10
			7.85	9.38	13.2	15.3	19.4	23.4	32.6	38.7	46.9	58.1	70.4	84.7	100	100	100	100	100	100	100	100	100
		60Hz	0.63	0.76	1.1	1.3	1.6	1.9	2.6	3.2	3.8	4.7	5.7	6.8	8.6	10	10	10	10	10	10	10	10
			6.42	7.75	11.2	13.2	16.3	19.3	26.5	32.6	38.7	47.9	58.1	69.3	87.7	100	100	100	100	100	100	100	100

容许悬挂负载・容许轴向负载 To Allow The Hoisting Of The Load Allow Axial Load

电动机（圆轴型）→272页　　Motor(Round Shaft) →P272
减速机→272页　　Gearhead→P272

减速机的容许负载惯性惯量 J Permissible Load Inertia J For Gearhead

→272页→P272

外形图（单位 mm）Dimensions(Unit mm)

减速器附有安装用螺丝Mounting screws are included with gearhead.

● **导线型** Lead Wiring Type

重量 Weight：电动机 Motor： 2.5kg　　减速器 Gearhead： 1.35kg

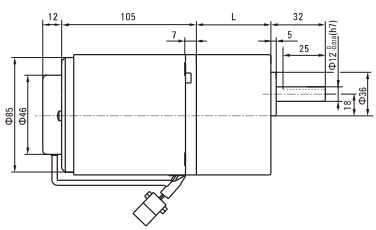

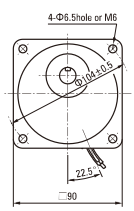

电动机型号 Motor Model	减速器型号 Gearhead Model	减速比 Gear Ratio	L1
5IK40RGN-A 5IK40RGN-E 5IK40RGN-C 5IK40RGN-H	5GN□K	3～18	42
		25～200	60

●减速器型号的□中为减速比的数值
Enter the gear ratio in the box（□）within the model name

ZD中大电机：15257416648

● **键・键槽（减速器附件）** Key・Keyway(Accessory Of Gearhead)

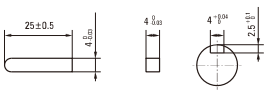

● **圆轴型的转轴部分** Shaft Section Of Round Shaft Type

除重量及轴部外电动机外形与齿轮轴型相同。

Excluding weight and the shaft section motor shape are the same as those of the pinion shaft type.

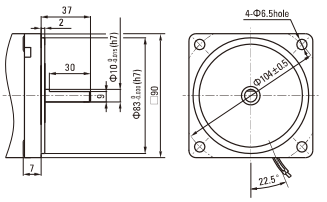

● **中间减速器** Decimal Gearhead

可安装在GN齿轮轴型上 Can be connected to GN pinion shaft type

电动机外形与齿轮轴型相同

5GN10XK

重量 Weight：0.6kg

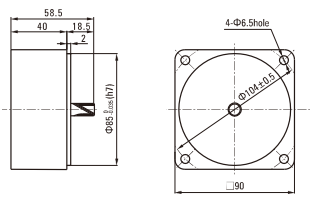

连接图 Wiring Diagram

US型/US Type	SS型/SS Type
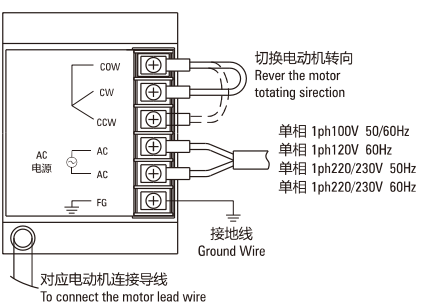	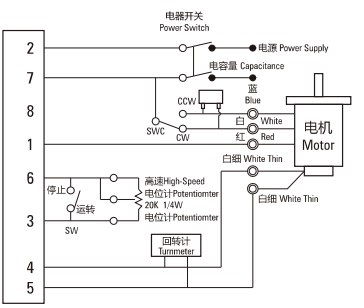

ZD中大电机：15257416648

弧锥直角
SPIRAL BEVEL RIGHT ANGLE

装有减速器时的容许转矩 Gear Motor-Torque Table

- 减速器·中间减速器另售。● 电动机型号的□中为表示带端子箱型的记号(T)。
  Gearhead and mid-gearbox can be sold separately. Enter the code that represents the terminal box type (T) in the box (□) within the model name.
- 减速器型号的□中为减速比的数值。 色表示与电动机同一方向运转，其他则为相反方向。
  Enter the gear ratio in the box (□) within the model name.
  The colored background indicates the same rotating direction of the motor while the rotating direction of others are opposite.
- 转速是以电动机的同步转速 (50Hz:1500r/min、60Hz:1800r/min) 为基准除以减速比而算出来的数值。实际转速将随负载大小变化而比所示数值减少2%~20%左右。
  The speed is calculated by diving the motor's synchronous speed (50Hz:1500r/min、60Hz:1800r/min) by the gear ratio. The actual speed is 2%~20% less than the displayed value, depending on the size of the load.
- 希望以大于下表的减速比进行进一步减速时，可在电动机与减速器之间安装减速比为10的中间减速器。这时的容许转矩为20N·m。
  To reduce the speed beyond the gear ratio in the table, attach a mid-gearbox (gear ratio:10) between the gearhead and motor. In that case, the permissible torque is 20N·m.

容许力矩单位 Allowance Torque Unit: 上段 Upside (N.m) / 下段 Belowside (kgf.cm)

机型Type 电动机/减速器 Motor/Gearhead		减速比Gear Ratio		3	3.6	5	6	7.5	9	12.5	15	18	25	30	3.6	50	60	75	90	100	120	150	180
		转速Speed r/min	50Hz	500	417	300	250	200	166	120	100	83	60	50	417	30	25	20	16	15	12	10	8
			60Hz	600	500	360	300	240	200	144	120	100	72	60	500	36	30	24	20	18	15	12	10
5IK40RGU-A□ 5IK40RGU-E□ 5IK40RGU-C□ 5IK40RGU-H□ 5IK40RGU-S□	5GU□RC 5GU□RT	容许力矩 Allowance Torque	50Hz	0.57	0.68	0.59	1.14	1.58	1.89	2.63	3.16	3.79	5.26	6.31	6.8	9.5	11.4	14.2	17.0	18.9	20.0	20.0	20.0
				5.80	6.96	9.66	11.6	16.1	19.3	26.8	32.2	38.6	53.7	64.4	70	97	116	145	174	193	200	200	200
			60Hz	0.46	0.55	0.76	0.92	1.27	1.53	2.12	2.55	3.05	4.24	5.09	5.50	7.64	9.16	11.5	13.7	15.3	18.3	20.0	20.0
				4.67	5.61	7.79	9.35	13.0	15.6	21.6	26.0	31.2	43.3	51.9	56.1	77.9	93.5	117	140	156	187	200	200

调速尺寸图 Speed Control Type Drawing

5IK40RGU-A□/5GU□RC 5IK40RGU-C□/5GU□RC 5IK40RGU-E□/5GU□RC 5IK40RGU-H□/5GU□RC	5IK40RGU-A□/5GU□RT 5IK40RGU-C□/5GU□RT 5IK40RGU-E□/5GU□RT 5IK40RGU-H□/5GU□RT

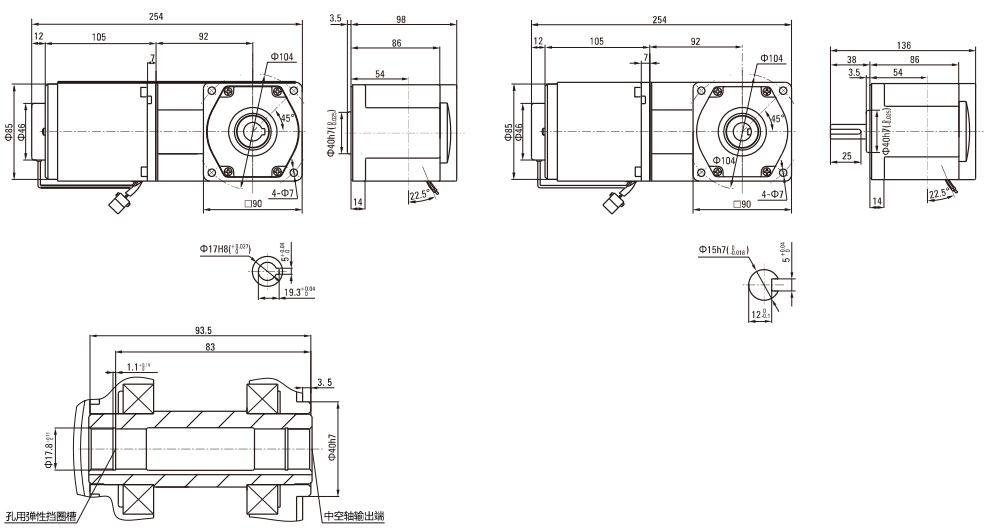

注：接插件配中大标准型调速器 Note:The connector is for zhongda standard speed controller

ZD中大电机：15257416648

蜗轮蜗杆直角
WORM GEAR RIGHT ANGLE

装有减速器时的容许转矩 Gear Motor-Torque Table

- 减速器·中间减速器另售。● 电动机型号的□中为表示带端子箱型的记号(T)。
  Gearhead and mid-gearbox can be sold separately. Enter the code that represents the terminal box type (T) in the box (□) within the model name.
- 减速器型号的□中为减速比的数值。 ▭ 色表示与电动机同一方向运转，其他则为相反方向。
  Enter the gear ratio in the box (□) within the model name.
  The colored background ▭ indicates the same rotating direction of the motor while the rotating direction of others are opposite.
- 转速是以电动机的同步转速 (50Hz:1500r/min、60Hz:1800r/min) 为基准除以减速比而算出来的数值。实际转速将随负载大小变化而比所示数值减少2%~20%左右。
  The speed is calculated by diving the motor's synchronous speed (50Hz:1500r/min、60Hz:1800r/min) by the gear ratio. The actual speed is 2%~20% less than the displayed value, depending on the size of the load.
- 希望以大于下表的减速比进行进一步减速时，可在电动机与减速器之间安装减速比为10的中间减速器。这时的容许转矩为20N·m。
  To reduce the speed beyond the gear ratio in the table, attach a mid-gearbox (gear ratio:10) between the gearhead and motor. In that case, the permissible torque is 20N·m.

容许力矩单位 Allowance Torque Unit: 上段 Upside (N.m) / 下段 Belowside (kgf.cm)

机型Type 电动机/减速器 Motor/Gearhead		减速比Gear Ratio		3	3.6	5	6	7.5	9	12.5	15	18	25	30	3.6	50	60	75	90	100	120	150	180
		转速Speed r/min	50Hz	500	417	300	250	200	166	120	100	83	60	50	417	30	25	20	16	15	12	10	8
			60Hz	600	500	360	300	240	200	144	120	100	72	60	500	36	30	24	20	18	15	12	10
5IK40RGU-A□ 5IK40RGU-E□ 5IK40RGU-C□ 5IK40RGU-H□ 5IK40RGU-S□	5GU□RH 5GU□RA	容许力矩 Allowance Torque	50Hz	0.41	0.50	0.62	0.74	0.93	1.11	1.55	1.86	2.23	3.09	3.71	4.46	6.19	7.43	9.28	11.1	12.4	14.9	18.6	20.0
				4.21	5.05	6.31	7.58	9.47	11.4	15.8	18.9	22.7	31.6	37.9	45.5	63.1	75.8	94.7	114	126	152	189	200
			60Hz	0.33	0.40	0.50	0.60	0.75	0.90	1.25	1.50	1.80	2.50	2.99	3.59	4.99	5.99	7.49	8.98	9.98	12.0	15.0	18.0
				3.39	4.07	5.09	6.11	7.64	9.17	12.7	15.3	18.3	25.5	30.6	36.7	50.9	61.1	76.4	91.7	102	122	153	183

调速尺寸图 Speed Control Type Drawing

5IK40RGU-A□/5GU□RH　5IK40RGU-C□/5GU□RH 5IK40RGU-E□/5GU□RH　5IK40RGU-H□/5GU□RH	5IK40RGU-A□/5GU□RA　5IK40RGU-C□/5GU□RA 5IK40RGU-E□/5GU□RA　5IK40RGU-H□/5GU□RA

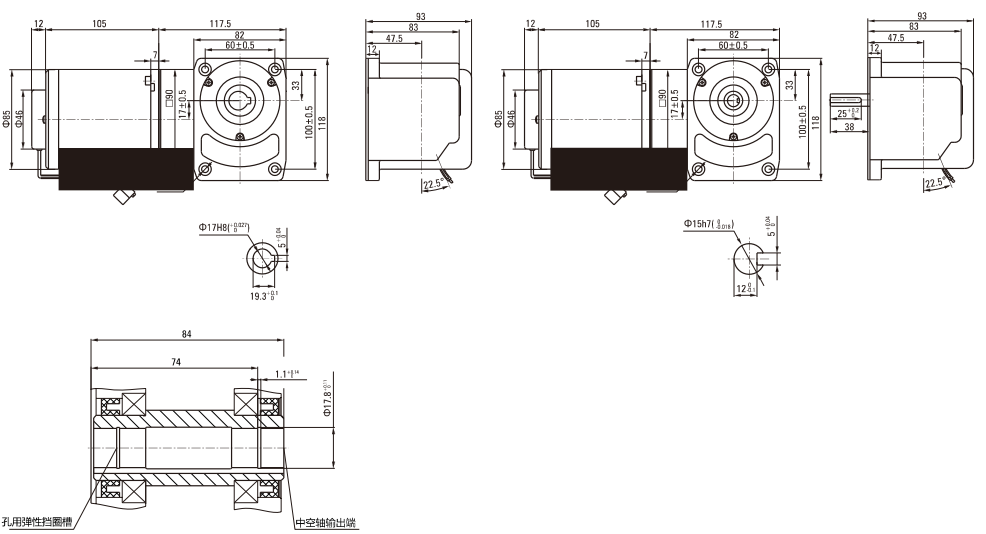

注：接插件配中大标准型调速器　Note:The connector is for zhongda standard speed controller

ZD中大电机：15257416648

调速电动机
SPEED ADJUSTABLE MOTOR

■60W □90mm

■规格 Specs 连续额定 Cont. Rated

型号Model・类型 Type 导线型 Lead Wire Type		最大输出功率 Output power W	电压 Voltage V	频率 Frequency Hz	调速范围 Speed Control Range r/min	容许转矩 Allowance Torque		启动转矩 Starting Torque mN.m	电流 Current A	电容器容量 Capacitor μF
齿轮轴型 Pinion Shaft	圆轴型 Round Shaft					1200r/min mN.m	90r/min mN.m			
5IK60RGN-AF	5IK60RA-AF	60	1ph 100	50	90～1350	460	140	265	1.00	20.0
				60	90～1650	490	160		1.10	
5IK60RGN-EF	5IK60RA-EF	60	1ph 110	60	90～1650	490	160	265	0.80	12.0
			1ph 120						0.85	
5IK60RGN-CF	5IK60RA-CF	60	1ph 220	50	90～1350	490	140	265	0.50	4.0
			1ph 230						0.55	
5IK60RGN-HF	5IK60RA-HF	60	1ph 220	60	90～1650	490	160	265	0.50	4.0
			1ph 230						0.55	

●各种安全规格以电动机铭牌上的型号取得认证。
When the motor is approved under various safety standards, the model name on the nameplate is the approved model name.
●注："-A" 型号中电压为110V时，配置电容器容量以实际铭牌为准。
Note:"-A" it means the voltage 110v,the assembly capacitor vaule it is according the labe.

■种类 Type

● **电动机** Motor

机型 Type	型号Model	
	齿轮轴型 Pinion Shaft	圆轴型 Round Shaft
导线型 Lead Wire Type	5IK60RGN-AF	5IK60RA-AF
	5IK60RGN-EF	5IK60RA-EF
	5IK60RGN-CF	5IK60RA-CF
	5IK60RGN-HF	5IK60RA-HF

● **平行轴减速器（另售）** Parallel Shaft Gearhead (Sold Separately)

减速器种类 Gearhead Type	减速器型号 Gearhead Model	减速比 Gear Ratio
长寿命●低噪音 Long Life ● Low Noise	5GN□K	3、3.6、5、6、7.5、9、12.5、15、18、25、30、36、50、60、75、90、100、120、150、180、200
	5GN10XK（中间减速器 Decimal Gearhead）	

●减速器型号的□中为减速比的数值
Enter the gear ratio in the box（□）within the model name

ZD中大电机：15257416648

装有减速器时的容许转矩 Gear Motor-Torque Table

- 减速器另售·中间减速器另售。
  Gearhead and mid-gearbox can be sold separately.
- 减速品型号的□中为减速比的数值。
  Enter the gear ratio in the box(□) within the model name.
- ▭色表示与电动机同一方向运转，其他则为相反方向。
  The colored background ▭ indicates the same rotating direction of the motor while the rotating direction of others are opposite.
- 转速是以电动机的同步转速（50Hz：1500r/min、60Hz：1800r/min）为基准除以减速比而算出来的数值。实际转速将随负载大小变化所示数值减少2%～20%左右。
  The speed is calculated by dividing the motor's synchronous speed (50Hz：1500r/min、60Hz：1800r/min) by the gear ratio. The actual speed is 2%～20% less than the displayed value, depending on the size of the load.
- 希望以大于下表的减速比进行进一步减速时，可在电动机与减速机之间安装减速比为10的中间减速机。这时的容许转矩为10N·m。
  To reduce the speed beyond the gear ratio in the table, attach a decimal gearhead(gear ratio:10)between the gearhead and motor. In that case, the permissible torque is 10N·m.

容许力矩单位 Allowance Torque Unit：上段 Upside（N.m）/下段 Belowside（kgf.cm）

类型 Type 电动机/减速机 Motor/Gearhead	减速比 Gear Ratio		3	3.6	5	6	7.5	9	12.5	15	18	25	30	36	50	60	75	90	100	120	150	180	200
	转速 Speed r/min	50Hz	500	417	300	250	200	166	120	100	83	60	50	41	30	25	20	16	15	12.5	10	8.3	7.5
		60Hz	600	500	360	300	240	200	144	120	100	72	60	50	36	30	24	20	18	15	12	10	9
5IK60RGN-A 5IK60RGN-E 5IK60RGN-C 5IK60RGN-H	5GN□K	50Hz	1.1	1.4	1.9	2.3	2.9	3.4	4.8	5.7	6.8	8.6	10	10	10	10	10	10	10	10	10	10	10
			11.2	14.2	19.3	23.4	29.6	34.7	48.9	58.1	69.3	87.7	100	100	100	100	100	100	100	100	100	100	100
		60Hz	0.92	1.1	1.5	1.8	2.3	2.8	3.8	4.6	5.5	6.9	8.3	10	10	10	10	10	10	10	10	10	10
			9.38	11.2	15.3	18.3	23.4	28.5	38.7	46.9	56.1	70.1	84.7	100	100	100	100	100	100	100	100	100	100

容许悬挂负载·容许轴向负载 To Allow The Hoisting Of The Load Allow Axial Load

电动机（圆轴型）→272页　　Motor(Round Shaft) →P272
减速机→272页　　Gearhead→P272

减速机的容许负载惯性惯量 J Permissible Load Inertia J For Gearhead

→272页→P272

外形图（单位 mm）Dimensions(Unit mm)

减速器附有安装用螺丝Mounting screws are included with gearhead.

● **导线型** Lead Wiring Type

重量 Weight：电动机 Motor： 2.8kg　　减速器 Gearhead： 1.35kg

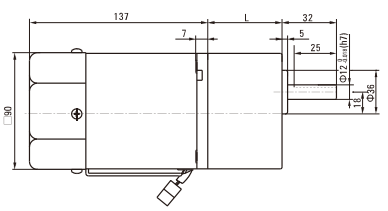

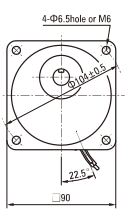

电动机型号 Motor Model	减速器型号 Gearhead Model	减速比 Gear Ratio	L1
5IK60RGN-A 5IK60RGN-E 5IK60RGN-C 5IK60RGN-H	5GN□K	3～18	42
		25～200	60

●减速器型号的□中为减速比的数值
Enter the gear ratio in the box（□）within the model name

ZD中大电机：15257416648

● **键・键槽（减速器附件）** Key・Keyway(Accessory Of Gearhead)

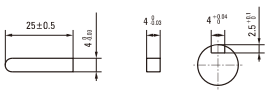

● **圆轴型的转轴部分** Shaft Section Of Round Shaft Type
除重量及轴部外电动机外形与齿轮轴型相同。
Excluding weight and the shaft section motor shape are the same as those of the pinion shaft type.

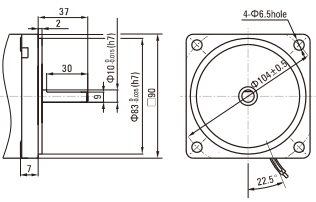

● **中间减速器** Decimal Gearhead
可安装在GN齿轮轴型上 Can be connected to GN pinion shaft type
电动机外形与齿轮轴型相同
5GN10XK
重量 Weight：0.6kg

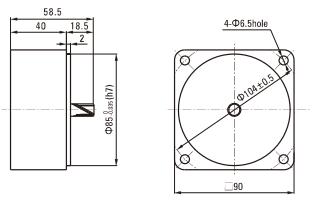

连接图 Wiring Diagram

US型/US Type	SS型/SS Type
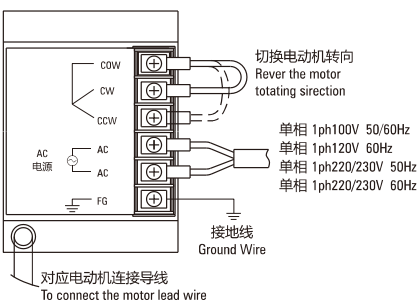	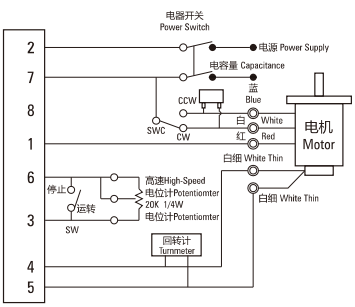

ZD中大电机：15257416648

调速电动机
SPEED ADJUSTABLE MOTOR

60W □90mm

规格 Specs 连续额定 Cont. Rated

型号Model・类型 Type 导线型 Lead Wire Type 齿轮轴型 Pinion Shaft	最大输出功率 Output power W	电压 Voltage V	频率 Frequency Hz	调速范围 Speed Control Range r/min	容许转矩 Allowance Torque 1200r/min mN.m	容许转矩 Allowance Torque 90r/min mN.m	启动转矩 Starting Torque mN.m	电流 Current A	电容器容量 Capacitor μF
5IK60RGU-AF	60	1ph 100	50	90～1350	460	140	265	1.00	20.0
			60	90～1650	490	160		1.10	
5IK60RGU-EF	60	1ph 110	60	90～1650	490	160	265	0.80	12.0
		1ph 120						0.85	
5IK60RGU-CF	60	1ph 220	50	90～1350	490	140	265	0.50	4.0
		1ph 230						0.55	
5IK60RGU-HF	60	1ph 220	60	90～1650	490	160	265	0.50	4.0
		1ph 230						0.55	

●各种安全规格以电动机铭牌上的型号取得认证。
When the motor is approved under various safety standards, the model name on the nameplate is the approved model name.
●注："-A" 型号中电压为110V时，配置电容器容量以实际铭牌为准。
Note:"-A" it means the voltage 110v,the assembly capacitor vaule it is according the labe.

种类 Type

● **电动机** Motor

机型 Type	型号Model 齿轮轴型 Pinion Shaft
导线型 Lead Wire Type	5IK60RGU-AF
	5IK60RGU-EF
	5IK60RGU-CF
	5IK60RGU-HF

● **平行轴减速器（另售）** Parallel Shaft Gearhead (Sold Separately)

减速器种类 Gearhead Type	减速器型号 Gearhead Model	减速比 Gear Ratio
长寿命●低噪音 Long Life ● Low Noise	5GU□KB	3、3.6、5、6、7.5、9、12.5、15、18、25、30、36、50、60、75、90、100、120、150、180、200
	5GU10XK（中间减速器 Decimal Gearhead）	

●减速器型号的□中为减速比的数值
Enter the gear ratio in the box（□）within the model name

ZD中大电机：15257416648

装有减速器时的容许转矩 Gear Motor-Torque Table

- 减速器另售·中间减速器另售。电动机型号的□中为表示带端子箱型的记号(T)。
  Gearhead and mid-gearbox can be sold separately. Enter the code that represents the terminal box type (T) in the box (□) within the model name.
- 减速品型号的□中为减速比的数值。
  Enter the gear ratio in the box(□) within the model name.
- ▭色表示与电动机同一方向运转，其他则为相反方向。
  The colored background ▭ indicates the same rotating direction of the motor while the rotating direction of others are opposite.
- 转速是以电动机的同步转速（50Hz：1500r/min、60Hz：1800r/min）为基准除以减速比而算出来的数值。实际转速将随负载大小变化所示数值减少2%～20%左右。
  The speed is calculated by dividing the motor's synchronous speed (50Hz：1500r/min、60Hz：1800r/min) by the gear ratio. The actual speed is 2%～20% less than the displayed value, depending on the size of the load.
- 希望以大于下表的减速比进行进一步减速时，可在电动机与减速机之间安装减速比为10的中间减速机。这时的容许转矩为20N·m。
  To reduce the speed beyond the gear ratio in the table, attach a decimal gearhead(gear ratio:10)between the gearhead and motor. In that case, the permissible torque is 20N·m.

容许力矩单位 Allowance Torque Unit：上段 Upside（N.m）/下段 Belowside（kgf.cm）

类型 Type 电动机/减速机 Motor/Gearhead	减速比 Gear Ratio		3	3.6	5	6	7.5	9	12.5	15	18	25	30	36	50	60	75	90	100	120	150	180	200
	转速 Speed r/min	50Hz	500	417	300	250	200	166	120	100	83	60	50	41	30	25	20	16	15	12.5	10	8.3	7.5
		60Hz	600	500	360	300	240	200	144	120	100	72	60	50	36	30	24	20	18	15	12	10	9
5IK60RGU-AF 5IK60RGU-EF 5IK60RGU-CF 5IK60RGU-HF	5GU□KB 5GU□K	50Hz	1.1	1.4	1.9	2.3	2.9	3.4	4.8	5.7	6.8	8.6	10	10.3	12.4	15.5	18.6	20	20	20	20	20	20
			11.2	14.2	19.3	23.4	29.6	34.7	48.9	58.1	69.3	87.7	100	105	126	158	189	200	200	200	200	200	200
		60Hz	0.92	1.1	1.5	1.8	2.3	2.8	3.8	4.6	5.5	6.9	8.3	83	10	12.5	15	18.8	20	20	20	20	20
			9.38	11.2	15.3	18.3	23.4	28.5	38.7	46.9	56.1	70.1	84.7	84.6	102	127	153	192	200	200	200	200	200

容许悬挂负载·容许轴向负载 To Allow The Hoisting Of The Load Allow Axial Load

电动机（圆轴型）→272页　　Motor(Round Shaft) →P272
减速机→272页　　Gearhead→P272

减速机的容许负载惯性惯量 J Permissible Load Inertia J For Gearhead

→272页→P272

外形图（单位 mm）Dimensions(Unit mm)

减速器附有安装用螺丝Mounting screws are included with gearhead.

● **导线型** Lead Wiring Type

重量 Weight：电动机 Motor： 2.8kg　　减速器 Gearhead： 1.5kg

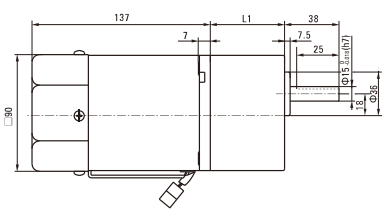

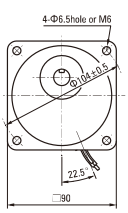

电动机型号 Motor Model	减速器型号 Gearhead Model	减速比 Gear Ratio	L1
5IK60RGU-AF 5IK60RGU-EF 5IK60RGU-CF 5IK60RGU-HF	5GU□KB	3～200	65.5

●减速器型号的□中为减速比的数值
Enter the gear ratio in the box（□）within the model name

ZD中大电机：15257416648

● **凸缘安装型减速器** Flange Mounting Reducer
可安装在GU齿轮轴型上
Can be mounted on GU type gear shaft
5GU□K
重量Weight:1.5kg

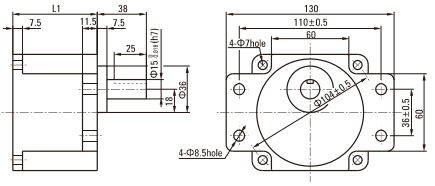

● **键・键槽（减速器附件）**
Key・Keyway(Accessory of Gearhead)

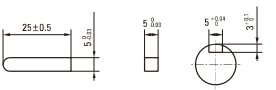

● **圆轴型的转轴部分** Shaft Section Of Round Shaft Type
除重量及轴部外电动机外形与齿轮轴型相同。
Excluding weight and the shaft section motor shape are the same as those of the pinion shaft type.

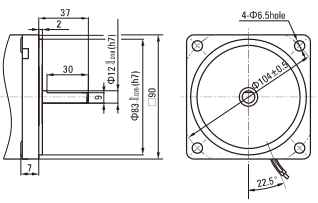

● **中间减速器** Decimal Gearhead
可安装在GU齿轮轴型上 Can be connected to GU pinion shaft type
电动机外形与齿轮轴型相同
5GU10XK
重量 Weight：0.65kg

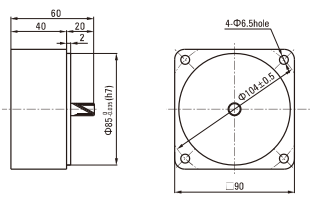

连接图 Wiring Diagram

US型/US Type	SS型/SS Type
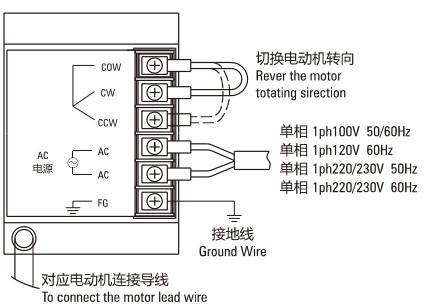	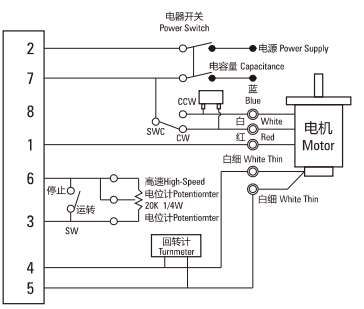

ZD中大电机：15257416648

弧锥直角
SPIRAL BEVEL RIGHT ANGLE

装有减速器时的容许转矩 Gear Motor-Torque Table

- 减速器·中间减速器另售。● 电动机型号的□中为表示带端子箱型的记号(T)。
  Gearhead and mid-gearbox can be sold separately. Enter the code that represents the terminal box type (T) in the box (□) within the model name.
- 减速器型号的□中为减速比的数值。 色表示与电动机同一方向运转，其他则为相反方向。
  Enter the gear ratio in the box (□) within the model name.
  The colored background indicates the same rotating direction of the motor while the rotating direction of others are opposite.
- 转速是以电动机的同步转速 (50Hz:1500r/min、60Hz:1800r/min) 为基准除以减速比而算出来的数值。实际转速将随负载大小变化而比所示数值减少2%~20%左右。
  The speed is calculated by diving the motor's synchronous speed (50Hz:1500r/min、60Hz:1800r/min) by the gear ratio. The actual speed is 2%~20% less than the displayed value, depending on the size of the load.
- 希望以大于下表的减速比进行进一步减速时，可在电动机与减速器之间安装减速比为10的中间减速器。这时的容许转矩为20N·m。
  To reduce the speed beyond the gear ratio in the table, attach a mid-gearbox (gear ratio:10) between the gearhead and motor. In that case, the permissible torque is 20N·m.

容许力矩单位 Allowance Torque Unit: 上段 Upside (N.m) / 下段 Belowside (kgf.cm)

机型Type 电动机/减速器 Motor/Gearhead		减速比Gear Ratio		3	3.6	5	6	7.5	9	12.5	15	18	25	30	3.6	50	60	75	90	100	120	150	180
		转速Speed r/min	50Hz	500	417	300	250	200	166	120	100	83	60	50	417	30	25	20	16	15	12	10	8
			60Hz	600	500	360	300	240	200	144	120	100	72	60	500	36	30	24	20	18	15	12	10
5IK60RGU-AF□ 5IK60RGU-EF□ 5IK60RGU-CF□ 5IK60RGU-HF□	5GU□RC 5GU□RT	容许力矩 Allowance Torque	50Hz	0.85	1.02	1.42	1.70	2.37	2.84	3.95	4.73	5.68	7.89	9.47	10.2	14.2	17.0	20.0	20.0	20.0	20.0	20.0	20.0
				8.70	10.4	14.5	17.4	24.2	29.0	40.3	48.3	58.0	80.5	96.6	104	145	174	200	200	200	200	200	200
			60Hz	0.69	0.82	1.15	1.37	1.91	2.29	3.18	3.82	4.58	6.36	7.64	8.25	11.5	13.7	17.2	20.0	20.0	20.0	20.0	20.0
				6.73	8.08	11.2	13.5	19.48	23.37	32.46	38.96	46.75	64.93	77.92	84.1	117	140	175	200	200	200	200	200

调速尺寸图 Speed Control Type Drawing

5IK60RGU-AF□/5GU□RC 5IK60RGU-EF□/5GU□RC	5IK60RGU-CF□/5GU□RC 5IK60RGU-HF□/5GU□RC
5IK60RGU-AF□/5GU□RT 5IK60RGU-EF□/5GU□RT	5IK60RGU-CF□/5GU□RT 5IK60RGU-HF□/5GU□RT

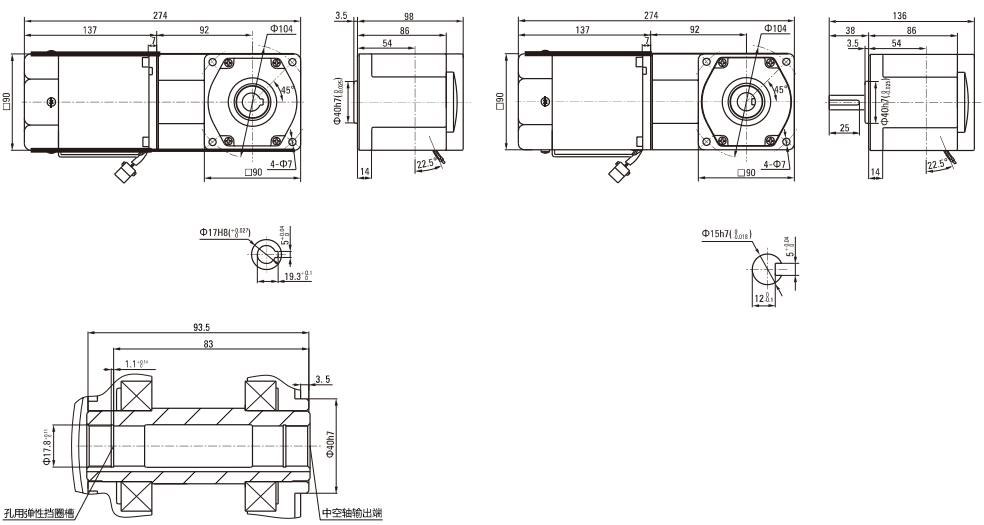

注：接插件配中大标准型调速器 Note:The connector is for zhongda standard speed controller

ZD中大电机：15257416648

蜗轮蜗杆直角
WORM GEAR RIGHT ANGLE

装有减速器时的容许转矩 Gear Motor-Torque Table

- 减速器·中间减速器另售。● 电动机型号的□中为表示带端子箱型的记号(T)。
  Gearhead and mid-gearbox can be sold separately. Enter the code that represents the terminal box type (T) in the box (□) within the model name.
- 减速器型号的□中为减速比的数值。 色表示与电动机同一方向运转，其他则为相反方向。
  Enter the gear ratio in the box (□) within the model name.
  The colored background indicates the same rotating direction of the motor while the rotating direction of others are opposite.
- 转速是以电动机的同步转速 (50Hz:1500r/min、60Hz:1800r/min) 为基准除以减速比而算出来的数值。实际转速将随负载大小变化而比所示数值减少2%~20%左右。
  The speed is calculated by diving the motor's synchronous speed (50Hz:1500r/min、60Hz:1800r/min) by the gear ratio. The actual speed is 2%～20% less than the displayed value, depending on the size of the load.
- 希望以大于下表的减速比进行进一步减速时，可在电动机与减速器之间安装减速比为10的中间减速器。这时的容许转矩为20N·m。
  To reduce the speed beyond the gear ratio in the table, attach a mid-gearbox (gear ratio:10) between the gearhead and motor. In that case, the permissible torque is 20N·m.

容许力矩单位 Allowance Torque Unit: 上段 Upside (N.m) / 下段 Belowside (kgf.cm)

机型Type 电动机/减速器 Motor/Gearhead		减速比Gear Ratio		3	3.6	5	6	7.5	9	12.5	15	18	25	30	3.6	50	60	75	90	100	120	150	180
		转速Speed r/min	50Hz	500	417	300	250	200	166	120	100	83	60	50	417	30	25	20	16	15	12	10	8
			60Hz	600	500	360	300	240	200	144	120	100	72	60	500	36	30	24	20	18	15	12	10
5IK60RGU-AF□ 5IK60RGU-EF□ 5IK60RGU-CF□ 5IK60RGU-HF□	5GU□RH 5GU□RA	容许力矩 Allowance Torque	50Hz	0.62	0.74	0.93	1.11	1.39	1.67	2.32	2.78	3.34	4.64	5.57	6.68	9.28	11.1	13.9	16.7	18.6	20.0	20.0	20.0
				6.31	7.58	9.47	11.4	14.2	17.0	23.7	28.4	34.1	47.4	56.8	68.2	94.7	114	142	170	189	200	200	200
			60Hz	0.50	0.60	0.75	0.90	1.12	1.35	1.87	2.25	2.69	3.74	4.49	5.39	7.49	8.98	11.2	13.5	15.0	18.0	20.0	20.0
				5.09	6.11	7.64	9.17	11.5	13.7	19.1	22.9	27.5	38.2	45.8	55.0	76.4	91.7	115	137	153	183	200	200

调速尺寸图 Speed Control Type Drawing

5IK60RGU-AF□/5GU□RH 5IK60RGU-CF□/5GU□RH 5IK60RGU-EF□/5GU□RH 5IK60RGU-HF□/5GU□RH	5IK60RGU-AF□/5GU□RA 5IK60RGU-CF□/5GU□RA 5IK60RGU-EF□/5GU□RA 5IK60RGU-HF□/5GU□RA

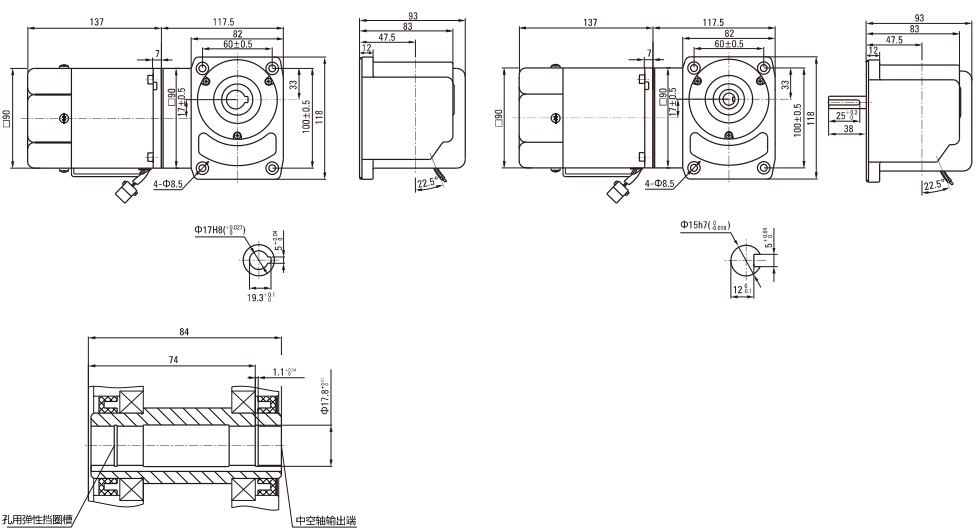

注：接插件配中大标准型调速器 Note:The connector is for zhongda standard speed controller

ZD中大电机：15257416648

调速电动机
SPEED ADJUSTABLE MOTOR

■90W □90mm

■规格 Specs 连续额定 Cont. Rated

型号Model・类型 Type 导线型 Lead Wire Type		最大输出功率 Output power W	电压 Voltage V	频率 Frequency Hz	调速范围 Speed Control Range r/min	容许转矩 Allowance Torque		启动转矩 Starting Torque mN.m	电流 Current A	电容器容量 Capacitor μF
齿轮轴型 Pinion Shaft	圆轴型 Round Shaft					1200r/min mN.m	90r/min mN.m			
5IK90RGU-AF	5IK90RA-AF	90	1ph 100	50	90～1350	710	230	405	1.55	25.0
				60	90～1650		260		1.85	
5IK90RGU-EF	5IK90RA-EF	90	1ph 110	60	90～1650	710	260	410	1.40	20.0
			1ph 120						1.45	
5IK90RGU-CF	5IK90RA-CF	90	1ph 220	50	90～1350	710	230	410	0.72	5.0
			1ph 230						0.70	
5IK90RGU-HF	5IK90RA-HF	90	1ph 220	60	90～1650	710	260	410	0.71	5.0
			1ph 230						0.75	

●各种安全规格以电动机铭牌上的型号取得认证。
When the motor is approved under various safety standards, the model name on the nameplate is the approved model name.
●注："~A" 型号中电压为110V时，配置电容器容量以实际铭牌为准。
Note:"-A" it means the voltage 110v,the assembly capacitor vaule it is according the labe.

■种类 Type

● **电动机** Motor

机型 Type	型号Model	
	齿轮轴型 Pinion Shaft	圆轴型 Round Shaft
导线型 Lead Wire Type	5IK90RGU-AF	5IK90RA-AF
	5IK90RGU-EF	5IK90RA-EF
	5IK90RGU-CF	5IK90RA-CF
	5IK90RGU-HF	5IK90RA-HF

● **平行轴减速器（另售）** Parallel Shaft Gearhead (Sold Separately)

减速器种类 Gearhead Type	减速器型号 Gearhead Model	减速比 Gear Ratio
长寿命●低噪音 Long Life ● Low Noise	5GU□K	3、3.6、5、6、7.5、9、12.5、15、18、25、30、36、50、60、75、90、100、120、150、180、200
	5GU10XK（中间减速器 Decimal Gearhead）	

●减速器型号的□中为减速比的数值
Enter the gear ratio in the box（□）within the model name

ZD中大电机：15257416648

装有减速器时的容许转矩 Gear Motor-Torque Table

- 减速器另售·中间减速器另售。电动机型号的□中为表示带端子箱型的记号(T)。
  Gearhead and mid-gearbox can be sold separately. Enter the code that represents the terminal box type (T) in the box (□) within the model name.
- 减速品型号的□中为减速比的数值。
  Enter the gear ratio in the box(□) within the model name.
- ▭色表示与电动机同一方向运转，其他则为相反方向。
  The colored background ▭ indicates the same rotating direction of the motor while the rotating direction of others are opposite.
- 转速是以电动机的同步转速（50Hz：1500r/min、60Hz：1800r/min）为基准除以减速比而算出来的数值。实际转速将随负载大小变化所示数值减少2%～20%左右。
  The speed is calculated by dividing the motor's synchronous speed (50Hz：1500r/min、60Hz：1800r/min) by the gear ratio. The actual speed is 2%～20% less than the displayed value, depending on the size of the load.
- 希望以大于下表的减速比进行进一步减速时，可在电动机与减速机之间安装减速比为10的中间减速机。
  这时的容许转矩为20N·m。
  To reduce the speed beyond the gear ratio in the table, attach a decimal gearhead(gear ratio:10)between the gearhead and motor. In that case, the permissible torque is 20N·m.

容许力矩单位 Allowance Torque Unit：上段 Upside（N.m）/下段 Belowside（kgf.cm）

类型 Type 电动机/减速机 Motor/Gearhead	减速比 Gear Ratio		3	3.6	5	6	7.5	9	12.5	15	18	25	30	36	50	60	75	90	100	120	150	180	200
	转速 Speed r/min	50Hz	500	417	300	250	200	166	120	100	83	60	50	41	30	25	20	16	15	12.5	10	8.3	7.5
		60Hz	600	500	360	300	240	200	144	120	100	72	60	50	36	30	24	20	18	15	12	10	9
5IK90RGU-AF□ 5IK90RGU-EF□ 5IK90RGU-CF□ 5IK90RGU-HF□	5GU□KB 5GU□K	50Hz	1.7	20	2.8	3.4	4.3	5.1	6.4	7.7	9.2	11.6	13.6	16.6	20	20	20	20	20	20	20	20	20
			17.3	20.4	28.6	34.7	43.9	52.0	65.3	78.6	93.3	118	139	169	200	200	200	200	200	200	200	200	200
		60Hz	1.4	1.7	2.5	2.8	3.5	4.2	5.2	6.2	7.5	9.4	11.3	13.5	18.8	20	20	20	20	20	20	20	20
			14.3	17.3	25.5	28.6	35.7	42.9	53.1	63.3	76.5	95.9	115	138	19.2	200	200	200	200	200	200	200	200

容许悬挂负载・容许轴向负载 To Allow The Hoisting Of The Load Allow Axial Load

电动机（圆轴型）→272页　　Motor(Round Shaft) →P272
减速机→272页　　Gearhead→P272

减速机的容许负载惯性惯量 J Permissible Load Inertia J For Gearhead

→272页→P272

外形图（单位 mm）Dimensions(Unit mm)

减速器附有安装用螺丝Mounting screws are included with gearhead.

● **导线型** Lead Wiring Type

重量 Weight：电动机 Motor： 3.3kg　　减速器 Gearhead： 1.5kg

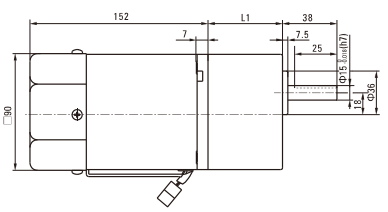

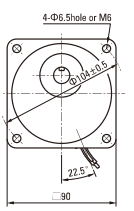

电动机型号 Motor Model	减速器型号 Gearhead Model	减速比 Gear Ratio	L1
5IK90RGU-AF 5IK90RGU-EF 5IK90RGU-CF 5IK90RGU-HF	5GU□KB	3～200	65.5

●减速器型号的□中为减速比的数值
Enter the gear ratio in the box（□）within the model name

ZD中大电机：15257416648

● **凸缘安装型减速器** Flange Mounting Reducer
可安装在GU齿轮轴型上
Can be mounted on GU type gear shaft
5GU□K
重量Weight:1.5kg

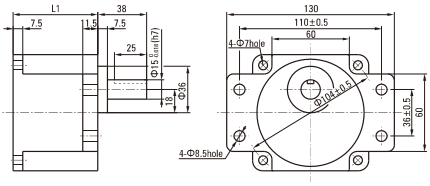

● **键・键槽（减速器附件）**
Key・Keyway(Accessory of Gearhead)

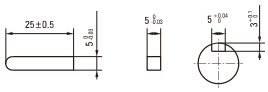

● **圆轴型的转轴部分** Shaft Section Of Round Shaft Type
除重量及轴部外电动机外形与齿轮轴型相同。
Excluding weight and the shaft section motor shape are the same as those of the pinion shaft type.

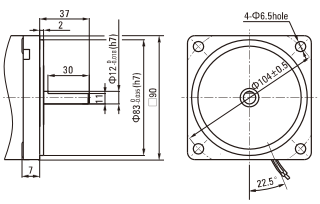

● **中间减速器** Decimal Gearhead
可安装在GU齿轮轴型上 Can be connected to GU pinion shaft type
电动机外形与齿轮轴型相同
5GU10XK
重量 Weight：0.65kg

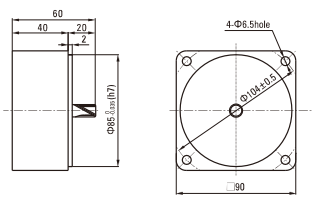

连接图 Wiring Diagram

US型/US Type	SS型/SS Type
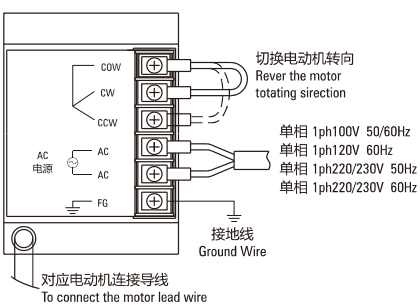	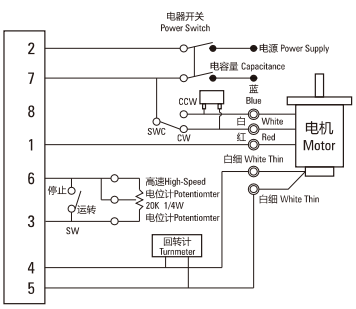

ZD中大电机：15257416648

弧锥直角
SPIRAL BEVEL RIGHT ANGLE

装有减速器时的容许转矩 Gear Motor-Torque Table

- 减速器·中间减速器另售。● 电动机型号的□中为表示带端子箱型的记号(T)。
  Gearhead and mid-gearbox can be sold separately. Enter the code that represents the terminal box type (T) in the box (□) within the model name.
- 减速器型号的□中为减速比的数值。 色表示与电动机同一方向运转，其他则为相反方向。
  Enter the gear ratio in the box (□) within the model name.
  The colored background indicates the same rotating direction of the motor while the rotating direction of others are opposite.
- 转速是以电动机的同步转速 (50Hz:1500r/min、60Hz:1800r/min) 为基准除以减速比而算出来的数值。实际转速将随负载大小变化而比所示数值减少2%~20%左右。
  The speed is calculated by diving the motor's synchronous speed (50Hz:1500r/min、60Hz:1800r/min) by the gear ratio. The actual speed is 2%~20% less than the displayed value, depending on the size of the load.
- 希望以大于下表的减速比进行进一步减速时，可在电动机与减速器之间安装减速比为10的中间减速器。这时的容许转矩为20N·m。
  To reduce the speed beyond the gear ratio in the table, attach a mid-gearbox (gear ratio:10) between the gearhead and motor. In that case, the permissible torque is 20N·m.

容许力矩单位 Allowance Torque Unit: 上段 Upside (N.m) / 下段 Belowside (kgf.cm)

机型Type 电动机/减速器 Motor/Gearhead		减速比Gear Ratio		3	3.6	5	6	7.5	9	12.5	15	18	25	30	3.6	50	60	75	90	100	120	150	180
		转速Speed r/min	50Hz	500	417	300	250	200	166	120	100	83	60	50	417	30	25	20	16	15	12	10	8
			60Hz	600	500	360	300	240	200	144	120	100	72	60	500	36	30	24	20	18	15	12	10
5IK90RGU-AF□ 5IK90RGU-EF□ 5IK90RGU-CF□ 5IK90RGU-HF□	5GU□RC 5GU□RT	容许力矩 Allowance Torque	50Hz	1.28	1.53	2.13	2.56	3.55	4.26	5.92	7.10	8.52	11.8	14.2	15.3	20.0	20.0	20.0	20.0	20.0	20.0	20.0	20.0
				13.0	15.7	21.7	26.1	36.2	43.5	60.4	72.5	87.0	121	145	157	200	200	200	200	200	200	200	200
			60Hz	1.03	1.24	1.72	2.06	2.86	3.44	4.77	5.73	6.87	9.54	11.5	12.4	17.2	20.0	20.0	20.0	20.0	20.0	20.0	20.0
				10.5	12.6	17.5	21.0	29.2	35.1	48.7	58.4	70.1	97.4	117	126	175	200	200	200	200	200	200	200

调速尺寸图 Speed Control Type Drawing

5IK90RGU-AF□/5GU□RC 5IK90RGU-CF□/5GU□RC 5IK90RGU-EF□/5GU□RC 5IK90RGU-HF□/5GU□RC	5IK90RGU-AF□/5GU□RT 5IK90RGU-CF□/5GU□RT 5IK90RGU-EF□/5GU□RT 5IK90RGU-HF□/5GU□RT

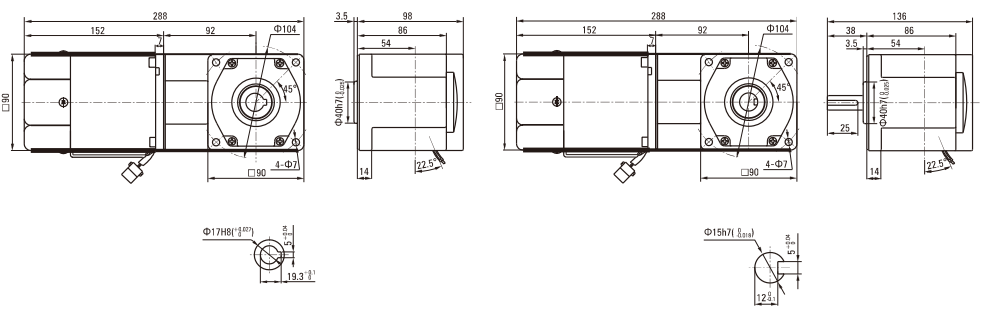

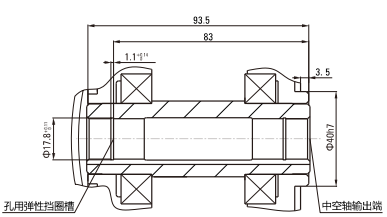

注：接插件配中大标准型调速器 Note:The connector is for zhongda standard speed controller

ZD中大电机：15257416648

蜗轮蜗杆直角
WORM GEAR RIGHT ANGLE

装有减速器时的容许转矩 Gear Motor-Torque Table

- 减速器·中间减速器另售。● 电动机型号的□中为表示带端子箱型的记号(T)。
  Gearhead and mid-gearbox can be sold separately. Enter the code that represents the terminal box type (T) in the box (□) within the model name.
- 减速器型号的□中为减速比的数值。 色表示与电动机同一方向运转，其他则为相反方向。
  Enter the gear ratio in the box (□) within the model name.
  The colored background indicates the same rotating direction of the motor while the rotating ratio of others are opposite.
- 转速是以电动机的同步转速 (50Hz:1500r/min、60Hz:1800r/min) 为基准除以减速比而算出来的数值。实际转速将随负载大小变化而比所示数值减少2%~20%左右。
  The speed is calculated by diving the motor's synchronous speed (50Hz:1500r/min、60Hz:1800r/min) by the gear ratio. The actual speed is 2%~20% less than the displayed value, depending on the size of the load.
- 希望以大于下表的减速比进行进一步减速时，可在电动机与减速器之间安装减速比为10的中间减速器。这时的容许转矩为20N·m。
  To reduce the speed beyond the gear ratio in the table, attach a mid-gearbox (gear ratio:10) between the gearhead and motor. In that case, the permissible torque is 20N·m.

容许力矩单位 Allowance Torque Unit: 上段 Upside (N.m) / 下段 Belowside (kgf.cm)

机型Type 电动机/减速器 Motor/Gearhead		减速比Gear Ratio		3	3.6	5	6	7.5	9	12.5	15	18	25	30	3.6	50	60	75	90	100	120	150	180
		转速Speed r/min	50Hz	500	417	300	250	200	166	120	100	83	60	50	417	30	25	20	16	15	12	10	8
			60Hz	600	500	360	300	240	200	144	120	100	72	60	500	36	30	24	20	18	15	12	10
5IK90RGU-AF□ 5IK90RGU-EF□ 5IK90RGU-CF□ 5IK90RGU-HF□	5GU□RH 5GU□RA	容许力矩 Allowance Torque	50Hz	0.93	1.11	1.39	1.67	2.09	2.51	3.48	4.18	5.01	6.96	8.35	10.0	13.9	16.7	20.0	20.0	20.0	20.0	20.0	20.0
				9.47	11.4	14.2	17.0	21.3	25.6	35.5	42.6	51.1	71.0	85.2	102	142	170	204	200	200	200	200	200
			60Hz	0.75	0.90	1.12	1.35	1.68	2.02	2.81	3.37	4.04	5.61	6.74	8.08	11.2	13.5	16.8	20.0	20.0	20.0	20.0	20.0
				7.64	9.17	11.5	13.7	17.2	20.6	28.6	34.4	41.2	57.3	68.7	82.5	115	137	172	200	200	200	200	200

调速尺寸图 Speed Control Type Drawing

5IK90RGU-AF□/5GU□RH 5IK90RGU-EF□/5GU□RH	5IK90RGU-CF□/5GU□RH 5IK90RGU-HF□/5GU□RH
5IK90RGU-AF□/5GU□RA 5IK90RGU-EF□/5GU□RA	5IK90RGU-CF□/5GU□RA 5IK90RGU-HF□/5GU□RA

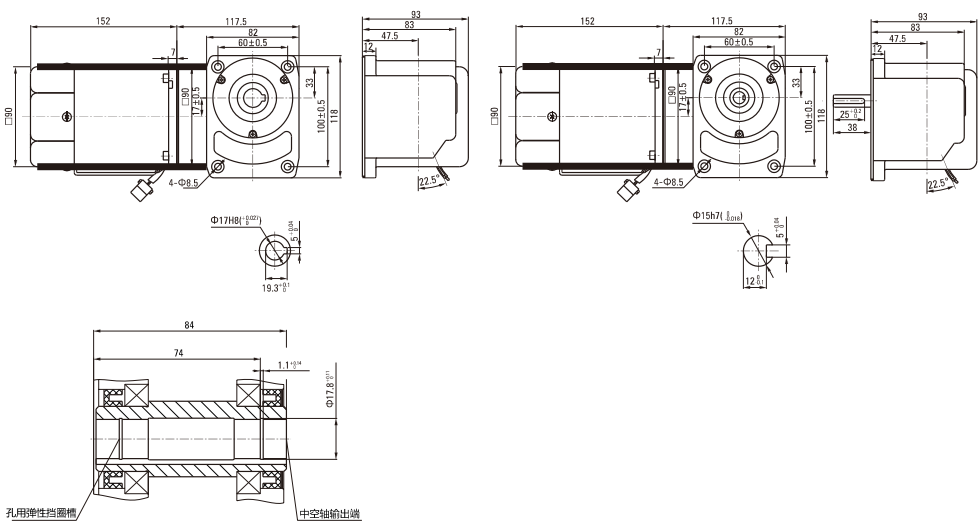

注：接插件配中大标准型调速器 Note:The connector is for zhongda standard speed controller

ZD中大电机：15257416648

调速电动机
SPEED ADJUSTABLE MOTOR

120W □90mm

规格 Specs 连续额定 Cont. Rated

型号Model・类型 Type 导线型 Lead Wire Type		最大输出功率 Output power W	电压 Voltage V	频率 Frequency Hz	调速范围 Speed Control Range r/min	容许转矩 Allowance Torque		启动转矩 Starting Torque mN.m	电流 Current A	电容器容量 Capacitor μF
齿轮轴型 Pinion Shaft	圆轴型 Round Shaft					1200r/min mN.m	90r/min mN.m			
5IK120RGU-AF	5IK120RA-AF	120	1ph 100	50	90～1350	750	330	530	2.10	30
				60	90～1650				2.50	
5IK120RGU-EF	5IK120RA-EF	120	1ph 110	60	90～1650	750	360	530	1.65	25
			1ph 120						1.80	
5IK120RGU-CF	5IK120RA-CF	120	1ph 220	50	90～1350	750	330	530	1.00	7.0
			1ph 230						0.95	
5IK120RGU-HF	5IK120RA-HF	120	1ph 220	60	90～1650	750	360	530	1.00	7.0
			1ph 230						0.95	

●各种安全规格以电动机铭牌上的型号取得认证。
When the motor is approved under various safety standards, the model name on the nameplate is the approved model name.
●注："-A" 型号中电压为110V时，配置电容器容量以实际铭牌为准。
Note:"-A" it means the voltage 110v,the assembly capacitor vaule it is according the labe.

种类 Type

● **电动机** Motor

机型 Type	型号Model	
	齿轮轴型 Pinion Shaft	圆轴型 Round Shaft
导线型 Lead Wire Type	5IK120RGU-AF	5IK120RA-AF
	5IK120RGU-EF	5IK120RA-EF
	5IK120RGU-CF	5IK120RA-CF
	5IK120RGU-HF	5IK120RA-HF

● **平行轴减速器（另售）** Parallel Shaft Gearhead (Sold Separately)

减速器种类 Gearhead Type	减速器型号 Gearhead Model	减速比 Gear Ratio
长寿命●低噪音 Long Life ● Low Noise	5GU□KB	3、3.6、5、6、7.5、9、12.5、15、18、25、30、36、50、60、75、90、100、120、150、180、200
	5GU10XK（中间减速器 Decimal Gearhead）	

●减速器型号的□中为减速比的数值
Enter the gear ratio in the box（□）within the model name

ZD中大电机：15257416648

装有减速器时的容许转矩 Gear Motor-Torque Table

- 减速器另售·中间减速器另售。电动机型号的□中为表示带端子箱型的记号(T)。
  Gearhead and mid-gearbox can be sold separately. Enter the code that represents the terminal box type (T) in the box (□) within the model name.
- 减速品型号的□中为减速比的数值。
  Enter the gear ratio in the box(□) within the model name.
- ▭色表示与电动机同一方向运转，其他则为相反方向。
  The colored background ▭ indicates the same rotating direction of the motor while the rotating direction of others are opposite.
- 转速是以电动机的同步转速（50Hz：1500r/min、60Hz：1800r/min）为基准除以减速比而算出来的数值。实际转速将随负载大小变化所示数值减少2%～20%左右。
  The speed is calculated by dividing the motor's synchronous speed (50Hz：1500r/min、60Hz：1800r/min) by the gear ratio. The actual speed is 2%～20% less than the displayed value, depending on the size of the load.
- 希望以大于下表的减速比进行进一步减速时，可在电动机与减速机之间安装减速比为10的中间减速机。这时的容许转矩为20N·m。
  To reduce the speed beyond the gear ratio in the table, attach a decimal gearhead(gear ratio:10)between the gearhead and motor. In that case, the permissible torque is 20N·m.

容许力矩单位 Allowance Torque Unit：上段 Upside（N.m）/下段 Belowside（kgf.cm）

类型 Type 电动机/减速机 Motor/Gearhead	减速比 Gear Ratio		3	3.6	5	6	7.5	9	12.5	15	18	25	30	36	50	60	75	90	100	120	150	180	200
	转速 Speed r/min	50Hz	500	417	300	250	200	166	120	100	83	60	50	41	30	25	20	16	15	12.5	10	8.3	7.5
		60Hz	600	500	360	300	240	200	144	120	100	72	60	50	36	30	24	20	18	15	12	10	9
5IK120RGU-AF 5IK120RGU-EF 5IK120RGU-CF 5IK120RGU-HF	5GU□KB 5GU□K	50Hz	2.3	2.7	3.8	4.5	5.6	6.8	8.5	10.2	12.2	15.3	18.4	20	20	20	20	20	20	20	20	20	20
			23.4	27.5	38.7	45.9	57.1	69.3	86.7	104	124	156	187	200	200	200	200	200	200	200	200	200	200
		60Hz	1.8	2.2	3.0	3.6	4.6	5.5	6.8	8.2	9.8	12.4	14.9	17.8	20	20	20	20	20	20	20	20	20
			18.3	22.4	30.6	36.7	46.9	56.1	69.5	83.6	100	126	152	181	200	200	200	200	200	200	200	200	200

容许悬挂负载·容许轴向负载 To Allow The Hoisting Of The Load Allow Axial Load

电动机（圆轴型）→272页　　Motor(Round Shaft) →P272
减速机→272页　　Gearhead→P272

减速机的容许负载惯性惯量 J Permissible Load Inertia J For Gearhead

→272页→P272

外形图（单位 mm）Dimensions(Unit mm)

减速器附有安装用螺丝Mounting screws are included with gearhead.

● **导线型** Lead Wiring Type

重量 Weight：电动机 Motor：3.5kg　　减速器 Gearhead：1.5kg

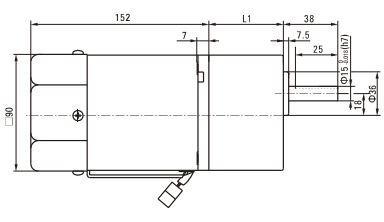

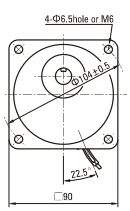

电动机型号 Motor Model	减速器型号 Gearhead Model	减速比 Gear Ratio	L1
5IK90RGU-AF 5IK90RGU-EF 5IK90RGU-CF 5IK90RGU-HF	5GU□KB	3～200	65.5

●减速器型号的□中为减速比的数值
Enter the gear ratio in the box（□）within the model name

ZD中大电机：15257416648

● **凸缘安装型减速器** Flange Mounting Reducer
可安装在GU齿轮轴型上
Can be mounted on GU type gear shaft
5GU□K
重量Weight:1.5kg

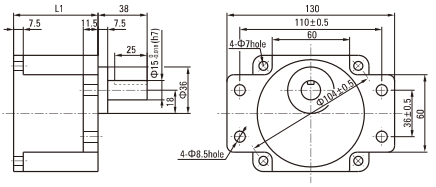

● **键・键槽（减速器附件）**
Key・Keyway(Accessory of Gearhead)

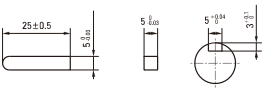

● **圆轴型的转轴部分** Shaft Section Of Round Shaft Type
除重量及轴部外电动机外形与齿轮轴型相同。
Excluding weight and the shaft section motor shape are the same as those of the pinion shaft type.

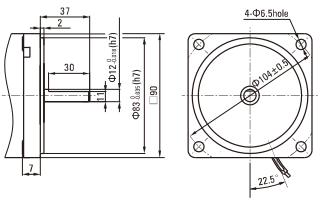

● **中间减速器** Decimal Gearhead
可安装在GU齿轮轴型上 Can be connected to GU pinion shaft type
电动机外形与齿轮轴型相同
5GU10XK
重量 Weight：0.65kg

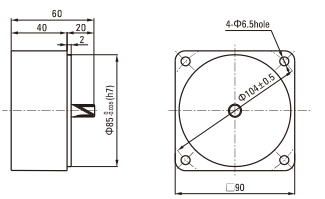

连接图 Wiring Diagram

US型/US Type	SS型/SS Type
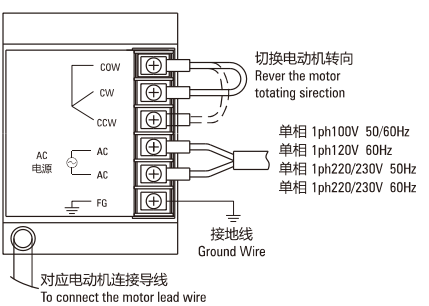	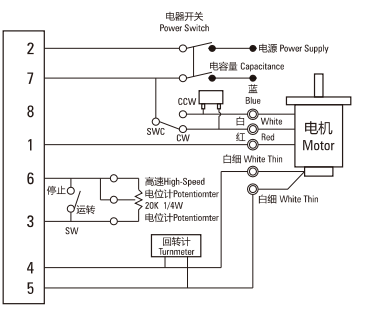

ZD中大电机：15257416648

弧锥直角
SPIRAL BEVEL RIGHT ANGLE

装有减速器时的容许转矩 Gear Motor-Torque Table

- 减速器·中间减速器另售。● 电动机型号的□中为表示带端子箱型的记号(T)。
  Gearhead and mid-gearbox can be sold separately. Enter the code that represents the terminal box type (T) in the box (□) within the model name.
- 减速器型号的□中为减速比的数值。 ▭ 色表示与电动机同一方向运转，其他则为相反方向。
  Enter the gear ratio in the box (□) within the model name.
  The colored background ▭ indicates the same rotating direction of the motor while the rotating direction of others are opposite.
- 转速是以电动机的同步转速 (50Hz:1500r/min、60Hz:1800r/min) 为基准除以减速比而算出来的数值。实际转速将随负载大小变化而比所示数值减少2%~20%左右。
  The speed is calculated by diving the motor's synchronous speed (50Hz:1500r/min、60Hz:1800r/min) by the gear ratio. The actual speed is 2%~20% less than the displayed value, depending on the size of the load.
- 希望以大于下表的减速比进行进一步减速时，可在电动机与减速器之间安装减速比为10的中间减速器。这时的容许转矩为20N·m。
  To reduce the speed beyond the gear ratio in the table, attach a mid-gearbox (gear ratio:10) between the gearhead and motor. In that case, the permissible torque is 20N·m.

容许力矩单位 Allowance Torque Unit: 上段 Upside (N.m) / 下段 Belowside (kgf.cm)

机型Type 电动机/减速器 Motor/Gearhead		减速比Gear Ratio		3	3.6	5	6	7.5	9	12.5	15	18	25	30	3.6	50	60	75	90	100	120	150	180
		转速Speed r/min	50Hz	500	417	300	250	200	166	120	100	83	60	50	417	30	25	20	16	15	12	10	8
			60Hz	600	500	360	300	240	200	144	120	100	72	60	500	36	30	24	20	18	15	12	10
5IK120RGU-AF□ 5IK120RGU-EF□ 5IK120RGU-CF□ 5IK120RGU-HF□	5GU□RC 5GU□RT	容许力矩 Allowance Torque	50Hz	1.70	2.05	2.84	3.41	4.73	5.68	7.89	9.47	11.4	15.8	18.9	20.0	20.0	20.0	20.0	20.0	20.0	20.0	20.0	20.0
				17.4	20.9	29.0	34.8	48.3	58.0	80.5	96.6	116	161	193	200	200	200	200	200	200	200	200	200
			60Hz	1.37	1.65	2.29	2.75	3.82	4.58	6.36	7.64	9.16	12.7	15.3	16.5	20.0	20.0	20.0	20.0	20.0	20.0	20.0	20.0
				14.0	16.8	23.4	28.0	39.0	46.7	64.9	77.9	93.5	130	156	168	200	200	200	200	200	200	200	200

调速尺寸图 Speed Control Type Drawing

5IK120RGU-AF□/5GU□RC　5IK120RGU-CF□/5GU□RC 5IK120RGU-EF□/5GU□RC　5IK120RGU-HF□/5GU□RC	5IK120RGU-AF□/5GU□RT　5IK120RGU-CF□/5GU□RT 5IK120RGU-EF□/5GU□RT　5IK120RGU-HF□/5GU□RT

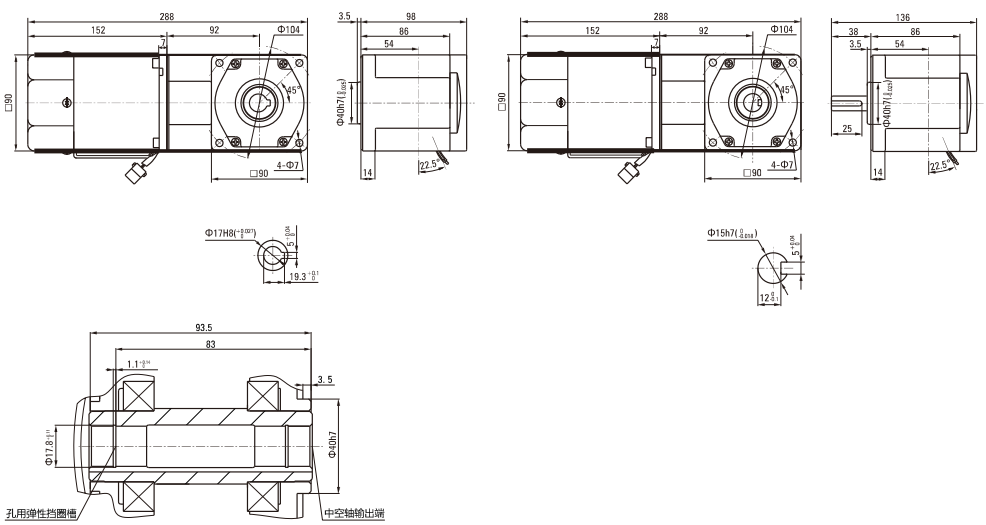

注：接插件配中大标准型调速器　Note:The connector is for zhongda standard speed controller

ZD中大电机：15257416648

蜗轮蜗杆直角
WORM GEAR RIGHT ANGLE

装有减速器时的容许转矩 Gear Motor-Torque Table

- 减速器·中间减速器另售。● 电动机型号的□中为表示带端子箱型的记号(T)。
  Gearhead and mid-gearbox can be sold separately. Enter the code that represents the terminal box type (T) in the box (□) within the model name.
- 减速器型号的□中为减速比的数值。 色表示与电动机同一方向运转，其他则为相反方向。
  Enter the gear ratio in the box (□) within the model name.
  The colored background indicates the same rotating direction of the motor while the rotating direction of others are opposite.
- 转速是以电动机的同步转速 (50Hz:1500r/min、60Hz:1800r/min) 为基准除以减速比而算出来的数值。实际转速将随负载大小变化而比所示数值减少2%~20%左右。
  The speed is calculated by diving the motor's synchronous speed (50Hz:1500r/min、60Hz:1800r/min) by the gear ratio. The actual speed is 2%～20% less than the displayed value, depending on the size of the load.
- 希望以大于下表的减速比进行进一步减速时，可在电动机与减速器之间安装减速比为10的中间减速器。这时的容许转矩为20N·m。
  To reduce the speed beyond the gear ratio in the table, attach a mid-gearbox (gear ratio:10) between the gearhead and motor. In that case, the permissible torque is 20N·m.

容许力矩单位 Allowance Torque Unit: 上段 Upside (N.m) / 下段 Belowside (kgf.cm)

机型Type 电动机/减速器 Motor/Gearhead		减速比Gear Ratio		3	3.6	5	6	7.5	9	12.5	15	18	25	30	3.6	50	60	75	90	100	120	150	180
		转速Speed r/min	50Hz	500	417	300	250	200	166	120	100	83	60	50	417	30	25	20	16	15	12	10	8
			60Hz	600	500	360	300	240	200	144	120	100	72	60	500	36	30	24	20	18	15	12	10
5IK120RGU-AF□ 5IK120RGU-EF□ 5IK120RGU-CF□ 5IK120RGU-HF□	5GU□RH 5GU□RA	容许力矩 Allowance Torque	50Hz	1.24	1.49	1.86	2.23	2.78	3.34	4.64	5.57	6.68	9.28	11.1	13.4	18.6	20.0	20.0	20.0	20.0	20.0	20.0	20.0
				12.6	15.2	18.9	22.7	28.4	34.1	47.4	56.8	68.2	94.7	114	136	189	200	200	200	200	200	200	200
			60Hz	1.00	1.20	1.50	1.80	2.25	2.69	3.74	4.49	5.39	7.49	8.98	10.8	15.0	18.0	20.0	20.0	20.0	20.0	20.0	20.0
				10.18	12.2	15.3	18.3	22.9	27.5	38.2	45.8	55.0	76.4	91.7	110	153	183	200	200	200	200	200	200

调速尺寸图 Speed Control Type Drawing

5IK120RGU-AF□/5GU□RH　5IK120RGU-CF□/5GU□RH 5IK120RGU-EF□/5GU□RH　5IK120RGU-HF□/5GU□RH	5IK120RGU-AF□/5GU□RA　5IK120RGU-CF□/5GU□RA 5IK120RGU-EF□/5GU□RA　5IK120RGU-HF□/5GU□RA

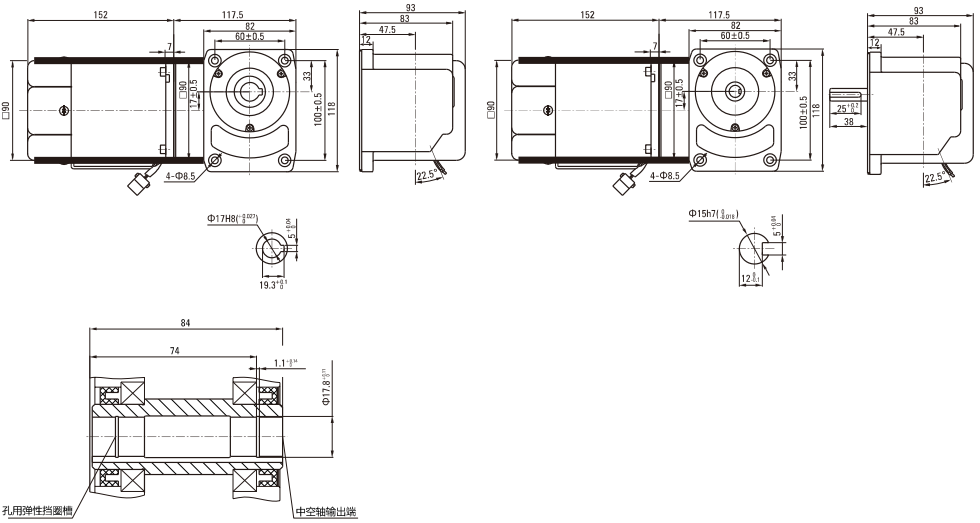

注：接插件配中大标准型调速器　Note:The connector is for zhongda standard speed controller

ZD中大电机：15257416648

调速电动机
SPEED ADJUSTABLE MOTOR

■120W □104mm

■规格 Specs 连续额定 Cont. Rated

型号Model・类型 Type 导线型 Lead Wire Type		最大输出功率 Output power W	电压 Voltage V	频率 Frequency Hz	调速范围 Speed Control Range r/min	容许转矩 Allowance Torque		启动转矩 Starting Torque mN.m	电流 Current A	电容器容量 Capacitor μF
齿轮轴型 Pinion Shaft	圆轴型 Round Shaft					1200r/min mN.m	90r/min mN.m			
6IK120RGU-AF	6IK120RA-AF	120	1ph 100	50	90～1350	750	360	530	2.10	30
				60	90～1650				2.50	
6IK120RGU-EF	6IK120RA-EF	120	1ph 110	60	90～1650	750	360	520	1.70	20
			1ph 120						1.80	
6IK120RGU-CF	6IK120RA-CF	120	1ph 220	50	90～1350	750	330	530	0.95	8.0
			1ph 230							
6IK120RGU-HF	6IK120RA-HF	120	1ph 220	60	90～1650	750	360	530	0.95	8.0
			1ph 230						1.00	

●各种安全规格以电动机铭牌上的型号取得认证。
When the motor is approved under various safety standards, the model name on the nameplate is the approved model name.
●注："~A" 型号中电压为110V时，配置电容器容量以实际铭牌为准。
Note:"-A" it means the voltage 110v,the assembly capacitor vaule it is according the labe.

■种类 Type

● **电动机** Motor

机型 Type	型号Model	
	齿轮轴型 Pinion Shaft	圆轴型 Round Shaft
导线型 Lead Wire Type	6IK120RGU-AF	6IK120RA-AF
	6IK120RGU-EF	6IK120RA-EF
	6IK120RGU-CF	6IK120RA-CF
	6IK120RGU-HF	6IK120RA-HF

● **平行轴减速器（另售）** Parallel Shaft Gearhead (Sold Separately)

减速器种类 Gearhead Type	减速器型号 Gearhead Model	减速比 Gear Ratio
长寿命●低噪音 Long Life ● Low Noise	6GU□K	3、3.6、5、6、7.5、9、12.5、15、18、25、30、36、50、60、75、90、100、120、150、180、200

●减速器型号的□中为减速比的数值
Enter the gear ratio in the box（□）within the model name

ZD中大电机：15257416648

装有减速器时的容许转矩 Gear Motor-Torque Table

- 减速器另售·中间减速器另售。电动机型号的□中为表示带端子箱型的记号(T)。
  Gearhead and mid-gearbox can be sold separately. Enter the code that represents the terminal box type (T) in the box (□) within the model name.
- 减速品型号的□中为减速比的数值。
  Enter the gear ratio in the box(□) within the model name.
- ▭色表示与电动机同一方向运转，其他则为相反方向。
  The colored background ▭ indicates the same rotating direction of the motor while the rotating direction of others are opposite.
- 转速是以电动机的同步转速（50Hz：1500r/min、60Hz：1800r/min）为基准除以减速比而算出来的数值。实际转速将随负载大小变化所示数值减少2%～20%左右。
  The speed is calculated by dividing the motor's synchronous speed (50Hz：1500r/min、60Hz：1800r/min) by the gear ratio. The actual speed is 2%～20% less than the displayed value, depending on the size of the load.

容许力矩单位 Allowance Torque Unit：上段 Upside（N.m）/下段 Belowside（kgf.cm）

类型 Type 电动机/减速机 Motor/Gearhead	减速比 Gear Ratio		3	3.6	5	6	7.5	9	12.5	15	18	25	30	36	50	60	75	90	100	120	150	180	200
	转速 Speed r/min	50Hz	500	417	300	250	200	166	120	100	83	60	50	41	30	25	20	16	15	12.5	10	8.3	7.5
		60Hz	600	500	360	300	240	200	144	120	100	72	60	50	36	30	24	20	18	15	12	10	9
6IK120RGU-AF□ 6IK120RGU-EF□ 6IK120RGU-CF□ 6IK120RGU-HF□	6GU□K	50Hz	2.3	2.7	3.8	4.5	5.6	6.8	8.5	10.2	12.2	15.3	18.4	22.1	30.7	36.8	40	40	40	40	40	40	40
			23.4	27.5	38.7	45.9	57.1	69.3	86.7	104	124	156	187	225	313	375	400	400	400	400	400	400	400
		60Hz	1.8	2.2	3.0	3.6	4.6	5.5	6.8	8.2	9.8	12.4	14.9	17.8	24.8	29.7	37.1	40	40	40	40	40	40
			18.3	22.4	30.6	36.7	46.9	56.1	69.3	83.6	100	126	152	181	253	303	378	400	400	400	400	400	400

容许悬挂负载·容许轴向负载 To Allow The Hoisting Of The Load Allow Axial Load

电动机（圆轴型）→272页　　Motor(Round Shaft) →P272
减速机→272页　　Gearhead→P272

减速机的容许负载惯性惯量 J Permissible Load Inertia J For Gearhead

→272页→P272

外形图（单位 mm）Dimensions(Unit mm)

减速器附有安装用螺丝Mounting screws are included with gearhead.

● **导线型** Lead Wiring Type

重量 Weight：电动机 Motor： 4.9kg　　减速器 Gearhead： 2.1kg

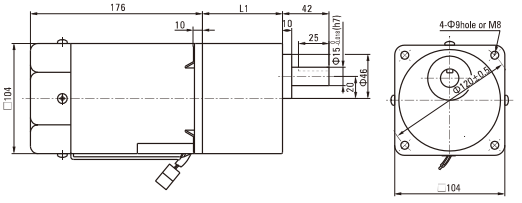

电动机型号 Motor Model	减速器型号 Gearhead Model	减速比 Gear Ratio	L1
6IK120RGU-AF 6IK120RGU-EF 6IK120RGU-CF 6IK120RGU-HF	6GU□K	3～200	72

●减速器型号的□中为减速比的数值
Enter the gear ratio in the box（□）within the model name

ZD中大电机：15257416648

● **圆轴型的转轴部分** Shaft Section Of Round Shaft Type

除重量及轴部外电动机外形与齿轮轴型相同。

Excluding weight and the shaft section motor shape are the same as those of the pinion shaft type.

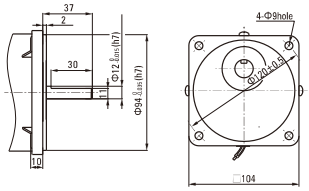

● **键・键槽（减速器附件）**

Key・Keyway(Accessory of Gearhead)

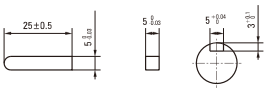

连接图 Wiring Diagram

US型/US Type	SS型/SS Type
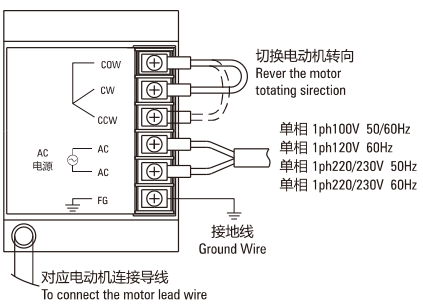	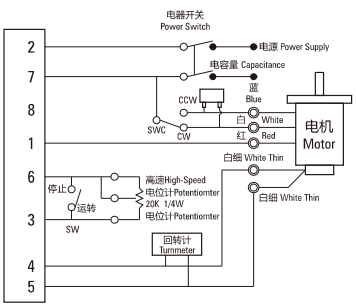

ZD中大电机：15257416648

弧锥直角
SPIRAL BEVEL RIGHT ANGLE

装有减速器时的容许转矩 Gear Motor-Torque Table

- 减速器·中间减速器另售。● 电动机型号的□中为表示带端子箱型的记号(T)。
  Gearhead and mid-gearbox can be sold separately. Enter the code that represents the terminal box type (T) in the box (□) within the model name.
- 减速器型号的□中为减速比的数值。 色表示与电动机同一方向运转，其他则为相反方向。
  Enter the gear ratio in the box (□) within the model name.
  The colored background indicates the same rotating direction of the motor while the rotating direction of others are opposite.
- 转速是以电动机的同步转速 (50Hz:1500r/min、60Hz:1800r/min) 为基准除以减速比而算出来的数值。实际转速将随负载大小变化而比所示数值减少2%~20%左右。
  The speed is calculated by diving the motor's synchronous speed (50Hz:1500r/min、60Hz:1800r/min) by the gear ratio. The actual speed is 2%~20% less than the displayed value, depending on the size of the load.
- 希望以大于下表的减速比进行进一步减速时，可在电动机与减速器之间安装减速比为10的中间减速器。这时的容许转矩为60N·m。
  To reduce the speed beyond the gear ratio in the table, attach a mid-gearbox (gear ratio:10) between the gearhead and motor. In that case, the permissible torque is 60N·m.

容许力矩单位 Allowance Torque Unit: 上段 Upside (N.m) / 下段 Belowside (kgf.cm)

机型Type 电动机/减速器 Motor/Gearhead		减速比Gear Ratio		3	3.6	5	6	7.5	9	12.5	15	18	25	30	3.6	50	60	75	90	100	120	150	180
		转速Speed r/min	50Hz	500	417	300	250	200	166	120	100	83	60	50	417	30	25	20	16	15	12	10	8
			60Hz	600	500	360	300	240	200	144	120	100	72	60	500	36	30	24	20	18	15	12	10
6IK120RGU-AF□ 6IK120RGU-EF□ 6IK120RGU-CF□ 6IK120RGU-HF□	6GU□RC 6GU□RT	容许力矩 Allowance Torque	50Hz	1.70	2.05	2.84	3.41	4.26	5.68	7.89	9.47	11.4	15.8	18.9	22.7	28.4	34.1	42.6	51.1	56.8	60.0	60.0	60.0
				17.4	20.9	29.0	34.8	43.5	58.0	80.5	96.6	116	161	193	232	290	348	435	522	580	600	600	600
			60Hz	1.37	1.65	2.29	2.75	3.44	4.58	6.36	7.64	9.16	12.7	15.3	18.3	22.9	27.5	34.4	41.2	45.8	55.0	60.0	60.0
				14.0	16.8	23.4	28.0	35.1	46.7	64.9	77.9	93.5	130	156	187	234	280	351	421	467	561	600	600

调速尺寸图 Speed Control Type Drawing

6IK120RGU-AF□/6GU□RC 6IK120RGU-CF□/6GU□RC 6IK120RGU-EF□/6GU□RC 6IK120RGU-HF□/6GU□RC	6IK120RGU-AF□/6GU□RT 6IK120RGU-CF□/6GU□RT 6IK120RGU-EF□/6GU□RT 6IK120RGU-HF□/6GU□RT

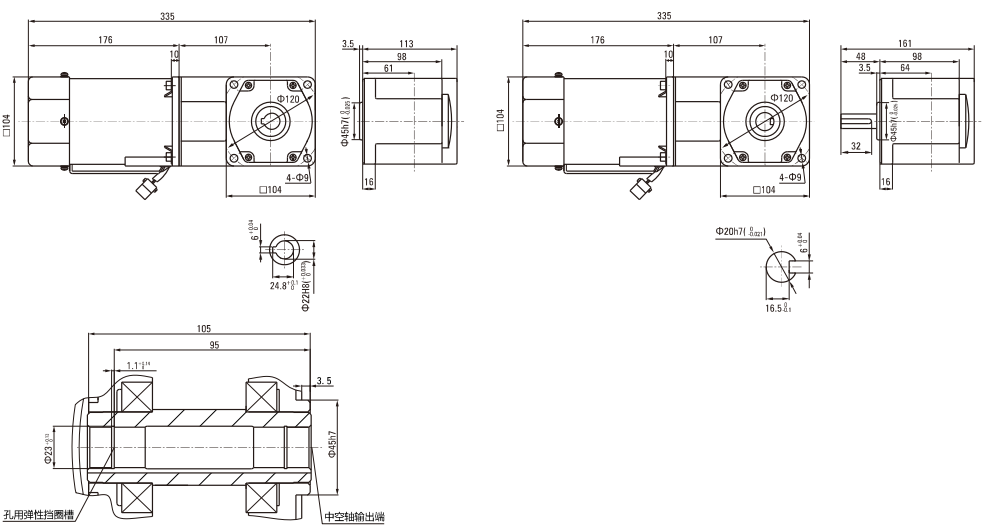

注：接插件配中大标准型调速器 Note:The connector is for zhongda standard speed controller

ZD中大电机：15257416648

调速电动机
SPEED ADJUSTABLE MOTOR

■140W　□104mm

■规格 Specs　连续额定 Cont. Rated

型号Model・类型 Type 导线型 Lead Wire Type		最大输出功率 Output power W	电压 Voltage V	频率 Frequency Hz	调速范围 Speed Control Range r/min	容许转矩 Allowance Torque		启动转矩 Starting Torque mN.m	电流 Current A	电容器容量 Capacitor μF
齿轮轴型 Pinion Shaft	圆轴型 Round Shaft					1200r/min mN.m	90r/min mN.m			
6IK140RGU-AF	6IK140RA-AF	140	1ph 100	50	90～1350	830	420	620	2.70	35
				60	90～1650				3.00	
6IK140RGU-EF	6IK140RA-EF	140	1ph 110	60	90～1650	830	450	620	1.80	25
			1ph 120						1.95	
6IK140RGU-CF	6IK140RA-CF	140	1ph 220	50	90～1350	830	420	620	1.05	10
			1ph 230						1.15	
6IK140RGU-HF	6IK140RA-HF	140	1ph 220	60	90～1650	830	450	620	1.05	10
			1ph 230						1.15	

●各种安全规格以电动机铭牌上的型号取得认证。
When the motor is approved under various safety standards, the model name on the nameplate is the approved model name.
●注："~A" 型号中电压为110V时，配置电容器容量以实际铭牌为准。
Note:"-A" it means the voltage 110v,the assembly capacitor vaule it is according the labe.

■种类 Type

● **电动机** Motor

机型 Type	型号Model	
	齿轮轴型 Pinion Shaft	圆轴型 Round Shaft
导线型 Lead Wire Type	6IK140RGU-AF	6IK140RA-AF
	6IK140RGU-EF	6IK140RA-EF
	6IK140RGU-CF	6IK140RA-CF
	6IK140RGU-HF	6IK140RA-HF

● **平行轴减速器（另售）** Parallel Shaft Gearhead (Sold Separately)

减速器种类 Gearhead Type	减速器型号 Gearhead Model	减速比 Gear Ratio
长寿命●低噪音 Long Life ● Low Noise	6GU□K	3、3.6、5、6、7.5、9、12.5、15、18、25、30、36、50、60、75、90、100、120、150、180、200

●减速器型号的□中为减速比的数值
Enter the gear ratio in the box（□）within the model name

ZD中大电机：15257416648

装有减速器时的容许转矩 Gear Motor-Torque Table

- 减速器另售·中间减速器另售。电动机型号的□中为表示带端子箱型的记号(T)。
  Gearhead and mid-gearbox can be sold separately. Enter the code that represents the terminal box type (T) in the box (□) within the model name.
- 减速品型号的□中为减速比的数值。
  Enter the gear ratio in the box(□) within the model name.
- ▭色表示与电动机同一方向运转，其他则为相反方向。
  The colored background ▭ indicates the same rotating direction of the motor while the rotating direction of others are opposite.
- 转速是以电动机的同步转速（50Hz：1500r/min、60Hz：1800r/min）为基准除以减速比而算出来的数值。实际转速将随负载大小变化所示数值减少2%～20%左右。
  The speed is calculated by dividing the motor's synchronous speed (50Hz：1500r/min、60Hz：1800r/min) by the gear ratio. The actual speed is 2%～20% less than the displayed value, depending on the size of the load.

容许力矩单位 Allowance Torque Unit：上段 Upside（N.m）/下段 Belowside（kgf.cm）

类型 Type 电动机/减速机 Motor/Gearhead	减速比 Gear Ratio		3	3.6	5	6	7.5	9	12.5	15	18	25	30	36	50	60	75	90	100	120	150	180	200
	转速 Speed r/min	50Hz	500	417	300	250	200	166	120	100	83	60	50	41	30	25	20	16	15	12.5	10	8.3	7.5
		60Hz	600	500	360	300	240	200	144	120	100	72	60	50	36	30	24	20	18	15	12	10	9
6IK140RGU-AF 6IK140RGU-EF 6IK140RGU-CF 6IK140RGU-HF	6GU□K	50Hz	2.6	3.1	4.4	5.2	5.2	6.6	9.9	11.8	14.2	17.8	21.4	25.7	35.6	40	40	40	40	40	40	40	40
			26.5	31.6	44.8	53.0	53.0	80.6	101	120	144	181	218	262	263	400	400	400	400	400	400	400	400
		60Hz	2.1	2.5	3.5	4.2	4.2	6.3	7.9	9.5	11.4	14.4	17.2	20.7	28.7	34.5	40	40	40	40	40	40	40
			21.4	25.5	35.7	42.8	42.8	64.2	80.6	96.9	116	147	175	211	292	352	400	400	400	400	400	400	400

容许悬挂负载·容许轴向负载 To Allow The Hoisting Of The Load Allow Axial Load

电动机（圆轴型）→272页　　Motor(Round Shaft) →P272
减速机→272页　　Gearhead→P272

减速机的容许负载惯性惯量 J Permissible Load Inertia J For Gearhead

→272页→P272

外形图（单位 mm）Dimensions(Unit mm)

减速器附有安装用螺丝Mounting screws are included with gearhead.

● **导线型** Lead Wiring Type

重量 Weight：电动机 Motor： 5.1kg　　减速器 Gearhead： 2.1kg

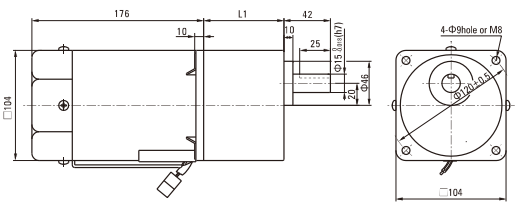

电动机型号 Motor Model	减速器型号 Gearhead Model	减速比 Gear Ratio	L1
6IK140RGU-AF 6IK140RGU-EF 6IK140RGU-CF 6IK140RGU-HF	6GU□K	3～200	72

●减速器型号的□中为减速比的数值
Enter the gear ratio in the box（□）within the model name

ZD中大电机：15257416648

● **圆轴型的转轴部分** Shaft Section Of Round Shaft Type
除重量及轴部外电动机外形与齿轮轴型相同。
Excluding weight and the shaft section motor shape are the same as those of the pinion shaft type.

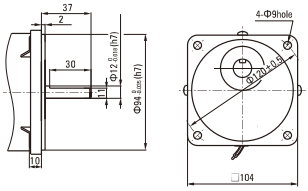

● **键・键槽（减速器附件）**
Key・Keyway(Accessory of Gearhead)

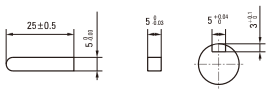

连接图 Wiring Diagram

US型/US Type	SS型/SS Type
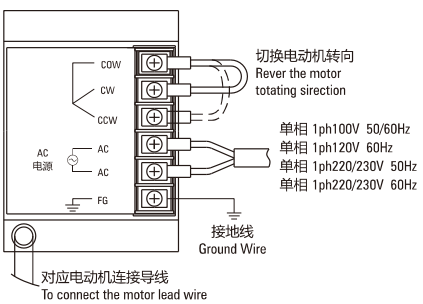	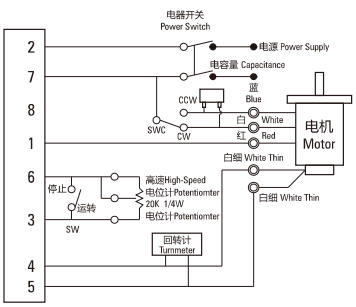

ZD中大电机：15257416648

弧锥直角
SPIRAL BEVEL RIGHT ANGLE

装有减速器时的容许转矩 Gear Motor-Torque Table

- 减速器·中间减速器另售。● 电动机型号的□中为表示带端子箱型的记号(T)。
  Gearhead and mid-gearbox can be sold separately. Enter the code that represents the terminal box type (T) in the box (□) within the model name.
- 减速器型号的□中为减速比的数值。 色表示与电动机同一方向运转，其他则为相反方向。
  Enter the gear ratio in the box (□) within the model name.
  The colored background indicates the same rotating direction of the motor while the rotating direction of others are opposite.
- 转速是以电动机的同步转速 (50Hz:1500r/min、60Hz:1800r/min) 为基准除以减速比而算出来的数值。实际转速将随负载大小变化而比所示数值减少2%~20%左右。
  The speed is calculated by diving the motor's synchronous speed (50Hz:1500r/min、60Hz:1800r/min) by the gear ratio. The actual speed is 2%~20% less than the displayed value, depending on the size of the load.
- 希望以大于下表的减速比进行进一步减速时，可在电动机与减速器之间安装减速比为10的中间减速器。这时的容许转矩为60N·m。
  To reduce the speed beyond the gear ratio in the table, attach a mid-gearbox (gear ratio:10) between the gearhead and motor. In that case, the permissible torque is 60N·m.

容许力矩单位 Allowance Torque Unit: 上段 Upside (N.m) / 下段 Belowside (kgf.cm)

机型Type 电动机/减速器 Motor/Gearhead		减速比Gear Ratio		3	3.6	5	6	7.5	9	12.5	15	18	25	30	3.6	50	60	75	90	100	120	150	180
		转速Speed r/min	50Hz	500	417	300	250	200	166	120	100	83	60	50	417	30	25	20	16	15	12	10	8
			60Hz	600	500	360	300	240	200	144	120	100	72	60	500	36	30	24	20	18	15	12	10
6IK140RGU-AF□ 6IK140RGU-EF□ 6IK140RGU-CF□ 6IK140RGU-HF□	6GU□RC 6GU□RT	容许力矩 Allowance Torque	50Hz	1.99	2.39	3.31	3.98	4.97	6.63	9.21	11.0	13.3	18.4	22.1	26.5	33.1	39.8	49.7	59.6	60.0	60.0	60.0	60.0
				20.3	24.3	33.8	40.6	50.7	67.6	93.9	113	135	188	225	271	338	406	507	600	600	600	600	600
			60Hz	1.60	1.92	2.67	3.21	4.01	5.34	7.42	8.91	10.7	14.8	17.8	21.4	26.7	32.1	40.1	48.1	53.4	60.0	60.0	60.0
				16.4	19.6	27.3	32.7	40.9	54.5	75.8	90.9	109	152	182	218	273	327	409	491	545	600	600	600

调速尺寸图 Speed Control Type Drawing

6IK140RGU-AF□/6GU□RC 6IK140RGU-CF□/6GU□RC 6IK140RGU-EF□/6GU□RC 6IK140RGU-HF□/6GU□RC	6IK140RGU-AF□/6GU□RT 6IK140RGU-CF□/6GU□RT 6IK140RGU-EF□/6GU□RT 6IK140RGU-HF□/6GU□RT

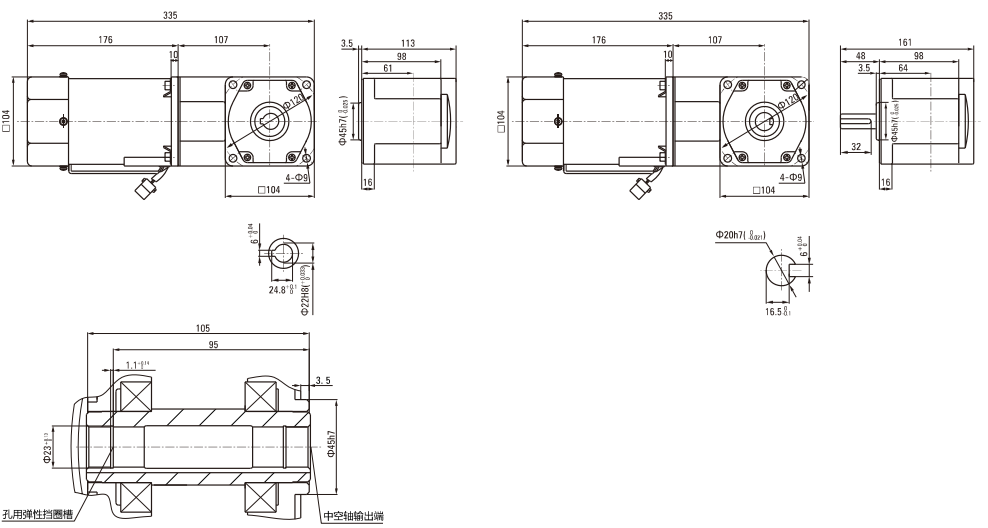

注：接插件配中大标准型调速器 Note:The connector is for zhongda standard speed controller

ZD中大电机：15257416648

调速电动机
SPEED ADJUSTABLE MOTOR

■200W □104mm

■规格 Specs 连续额定 Cont. Rated

型号Model・类型 Type 导线型 Lead Wire Type		最大输出功率 Output power W	电压 Voltage V	频率 Frequency Hz	调速范围 Speed Control Range r/min	容许转矩 Allowance Torque		启动转矩 Starting Torque mN.m	电流 Current A	电容器容量 Capacitor μF
齿轮轴型 Pinion Shaft	圆轴型 Round Shaft					1200r/min mN.m	90r/min mN.m			
6IK200RGU-CF	6IK200RA-CF	200	1ph 220 1ph 230	50	90～1350	920	500	1000	1.40	10
6IK200RGU-HF	6IK200RA-HF	200	1ph 220 1ph 230	60	90～1650	920	500	1000	1.40	10

●各种安全规格以电动机铭牌上的型号取得认证。
When the motor is approved under various safety standards, the model name on the nameplate is the approved model name.
●注："-A" 型号中电压为110V时，配置电容器容量以实际铭牌为准。
Note:"-A" it means the voltage 110v,the assembly capacitor vaule it is according the labe.

■种类 Type

● **电动机** Motor

机型 Type	型号Model	
	齿轮轴型 Pinion Shaft	圆轴型 Round Shaft
导线型 Lead Wire Type	6IK200RGU-CF	6IK200RA-CF
	6IK200RGU-HF	6IK200RA-HF

● **平行轴减速器（另售）** Parallel Shaft Gearhead (Sold Separately)

减速器种类 Gearhead Type	减速器型号 Gearhead Model	减速比 Gear Ratio
长寿命●低噪音 Long Life ● Low Noise	6GU□K	3、3.6、5、6、7.5、9、12.5、15、18、25、30、36、50、60、75、90、100、120、150、180、200

●减速器型号的□中为减速比的数值
Enter the gear ratio in the box（□）within the model name

ZD中大电机：15257416648

装有减速器时的容许转矩 Gear Motor-Torque Table

- 减速器另售·中间减速器另售。
  Gearhead are sold separately. Decimal gearheads are not available.
- 减速品型号的□中为减速比的数值。
  Enter the gear ratio in the box(□) within the model name.
- ▭色表示与电动机同一方向运转，其他则为相反方向。
  The colored background ▭ indicates the same rotating direction of the motor while the rotating direction of others are opposite.
- 转速是以电动机的同步转速（50Hz：1500r/min、60Hz：1800r/min）为基准除以减速比而算出来的数值。实际转速将随负载大小变化所示数值减少2%～20%左右。
  The speed is calculated by dividing the motor's synchronous speed (50Hz：1500r/min、60Hz：1800r/min) by the gear ratio. The actual speed is 2%～20% less than the displayed value, depending on the size of the load.

容许力矩单位 Allowance Torque Unit：上段 Upside（N.m）/下段 Belowside（kgf.cm）

类型 Type 电动机/减速机 Motor/Gearhead	减速比 Gear Ratio		3	3.6	5	6	7.5	9	12.5	15	18	25	30	36	50	60	75	90	100	120	150	180	200
	转速 Speed r/min	50Hz	500	417	300	250	200	166	120	100	83	60	50	42	30	25	20	16	15	12.5	10	8.3	7.5
		60Hz	600	500	360	300	240	200	144	120	100	72	60	50	36	30	24	20	18	15	12	10	9
6IK200RGU-AF□ 6IK200RGU-EF□ 6IK200RGU-CF□ 6IK200RGU-HF□ 6IK200RGU-SF□	6GU□K	50Hz	3.71	4.46	6.19	7.43	9.28	11.1	13.9	16.7	20.1	25.2	30.3	36.3	40	40	40	40	40	40	40	40	40
			37.9	45.5	63.1	75.8	94.7	114	142	171	205	257	309	370	400	400	400	400	400	400	400	400	400
		60Hz	2.99	3.59	4.99	5.99	7.49	8.98	11.2	13.5	16.2	20.3	24.4	29.3	40	40	40	40	40	40	40	40	40
			30.6	36.7	50.9	61.1	76.4	91.7	115	138	165	207	249	299	400	400	400	400	400	400	400	400	400

容许悬挂负载·容许轴向负载 To Allow The Hoisting Of The Load Allow Axial Load

电动机（圆轴型）→272页　　Motor(Round Shaft) →P272
减速机→272页　　Gearhead→P272

减速机的容许负载惯性惯量 J Permissible Load Inertia J For Gearhead

→272页→P272

外形图（单位 mm）Dimensions(Unit mm)

减速器附有安装用螺丝Mounting screws are included with gearhead.

● **导线型** Lead Wiring Type

重量 Weight：电动机 Motor： 5.1kg　　减速器 Gearhead： 2.1kg

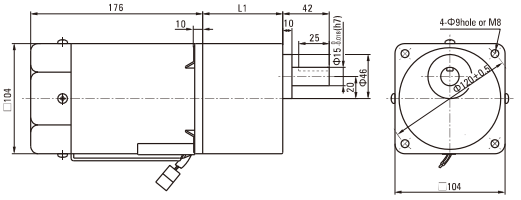

电动机型号 Motor Model	减速器型号 Gearhead Model	减速比 Gear Ratio	L1
6IK200RGU-CF 6IK200RGU-HF	6GU□K	3～200	72

●减速器型号的□中为减速比的数值
Enter the gear ratio in the box（□）within the model name

ZD中大电机：15257416648

● **圆轴型的转轴部分** Shaft Section Of Round Shaft Type
除重量及轴部外电动机外形与齿轮轴型相同。
Excluding weight and the shaft section motor shape are the same as those of the pinion shaft type.

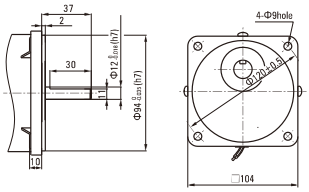

● **键・键槽（减速器附件）**
Key・Keyway(Accessory of Gearhead)

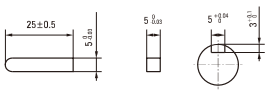

连接图 Wiring Diagram

US型/US Type	SS型/SS Type
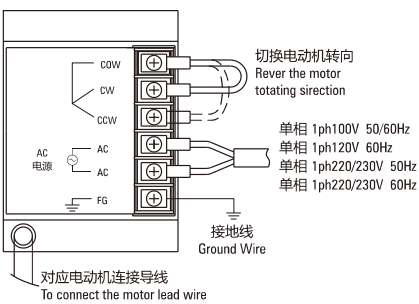	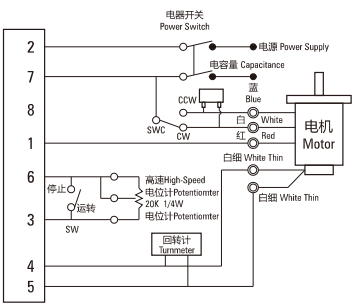

ZD中大电机：15257416648

弧锥直角
SPIRAL BEVEL RIGHT ANGLE

装有减速器时的容许转矩 Gear Motor-Torque Table

- 减速器·中间减速器另售。● 电动机型号的□中为表示带端子箱型的记号(T)。
  Gearhead and mid-gearbox can be sold separately. Enter the code that represents the terminal box type (T) in the box (□) within the model name.
- 减速器型号的□中为减速比的数值。 色表示与电动机同一方向运转，其他则为相反方向。
  Enter the gear ratio in the box (□) within the model name.
  The colored background indicates the same rotating direction of the motor while the rotating direction of others are opposite.
- 转速是以电动机的同步转速 (50Hz:1500r/min、60Hz:1800r/min) 为基准除以减速比而算出来的数值。实际转速将随负载大小变化而比所示数值减少2%~20%左右。
  The speed is calculated by diving the motor's synchronous speed (50Hz:1500r/min、60Hz:1800r/min) by the gear ratio. The actual speed is 2%~20% less than the displayed value, depending on the size of the load.
- 希望以大于下表的减速比进行进一步减速时，可在电动机与减速器之间安装减速比为10的中间减速器。这时的容许转矩为60N·m。
  To reduce the speed beyond the gear ratio in the table, attach a mid-gearbox (gear ratio:10) between the gearhead and motor. In that case, the permissible torque is 60N·m.

容许力矩单位 Allowance Torque Unit: 上段 Upside (N.m) / 下段 Belowside (kgf.cm)

机型Type 电动机/减速器 Motor/Gearhead		减速比Gear Ratio		3	3.6	5	6	7.5	9	12.5	15	18	25	30	36	50	60	75	90	100	120	150	180
		转速Speed r/min	50Hz	500	417	300	250	200	166	120	100	83	60	50	42	30	25	20	16	15	12	10	8
			60Hz	600	500	360	300	240	200	144	120	100	72	60	50	36	30	24	20	18	15	12	10
6IK200RGU-AF□	6GU□RC	容许力矩 Allowance Torque	50Hz	3.71	4.46	6.19	7.43	9.28	11.1	13.9	16.7	20.1	25.2	30.3	36.3	50.4	60.0	60.0	60.0	60.0	60.0	60.0	60.0
6IK200RGU-EF□	6GU□RC			37.9	45.5	63.1	75.8	94.7	114	142	171	205	257	30.9	370	515	600	600	600	600	600	600	600
6IK200RGU-CF□	6GU□RT		60Hz	2.99	3.59	4.99	5.99	7.49	8.98	11.2	13.5	16.2	20.3	24.4	29.3	40.7	48.8	60.0	60.0	60.0	60.0	60.0	60.0
6IK200RGU-HF□	6GU□RT			30.6	36.7	50.9	61.1	76.4	91.7	115	138	165	207	249	299	415	498	600	600	600	600	600	600
6IK200RGU-SF□	6GU□RT																						

调速尺寸图 Speed Control Type Drawing

6IK200RGU-AF□/6GU□RC 6IK200RGU-CF□/6GU□RC 6IK200RGU-EF□/6GU□RC 6IK200RGU-HF□/6GU□RC	6IK200RGU-AF□/6GU□RT 6IK200RGU-CF□/6GU□RT 6IK200RGU-EF□/6GU□RT 6IK200RGU-HF□/6GU□RT

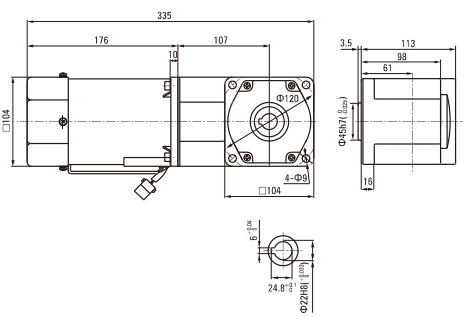

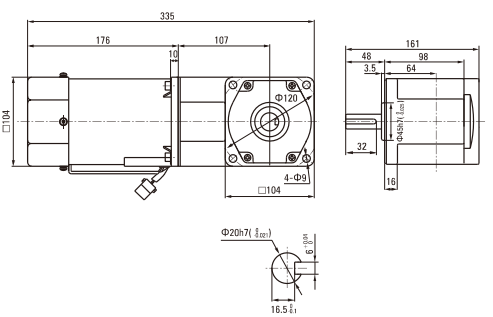

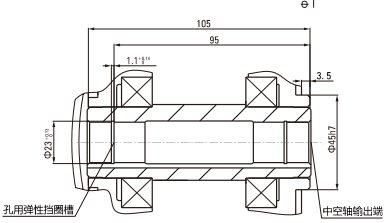

注：接插件配中大标准型调速器 Note:The connector is for zhongda standard speed controller

ZD中大电机：15257416648

调速电动机
SPEED ADJUSTABLE MOTOR

控制器型号说明 Description Of Governor Model

U

调速器种类
Speed Controller Type
U:组合型
U:Combination

S:分离型
S:Separation

S

调速器种类
Speed Controller Type
S:速度控制器
S:Speed Governor

11

电压
Voltage
11:单相110V50Hz
11:Single Phase 110V50Hz

22:单相220V50Hz
22:Single Phase 220V50Hz

33:数字显示器
33:Digital Display

A

电容安装方式
Capacitor Mounting Type
A:内置式电容器
A:Built-in Capacitor

B:外置式电容器
B:External Capacitor

组合型 Combination SS11、SS22 正、反转变速 Clockwise And Anti-Clockwise Speed Change

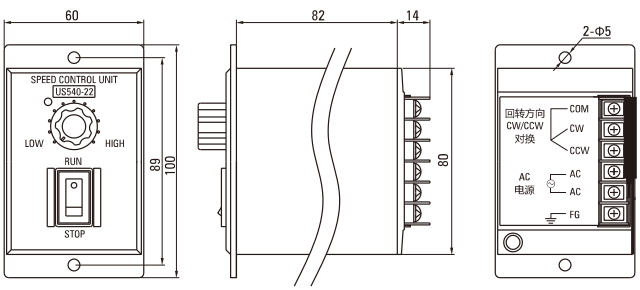

分离器 Separation SS11、SS22 正、反转变速 Clockwise And Anti-Clockwise Speed Change

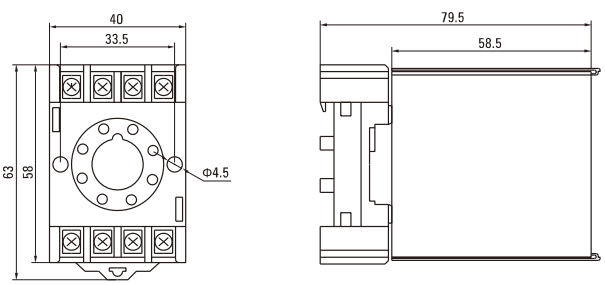

调速器特性表 List Of Speed Governor Characteristics

参数Parameter 型号Model	电压(V) Voltage(V)	频率(Hz) Voltage(Hz)	最大电流(A) Peak Current(A)	电机功率(W) Motor Power(W)	速度范围(r/min) Speed Range(r/min)	速度变速器 Speed Changer	速度应答器 Speed Responder	速度安定性 Speed Stability	工作环境温度 Working Ambient Temperature
US11	110V±10%	50/60	5	6～140	90/1350	3%	(0.5)	优 Excellent	-10℃～+50℃
US22	220V±10%			6～200	90/1650				
US11	110V±10%	50/60	5	6～140	90/1350	3%	(0.5)	优 Excellent	-10℃～+50℃
US22	220V±10%			6～200	90/1650				
US33	110V±10%	50/60	5	6～140	90/1350	3%	(0.5)	优 Excellent	-10℃～+50℃
	220V±10%			6～200	90/1650				